LUFF

IDLERS | PULLEYS | IMPACT BEDS | ACCESSORIES

CONVEYING PERFORMANCE GUARANTEED

2 YEAR WARRANTY ON ALL LUFF PRODUCTS

5 DAY DELIVERY TIME

QUALITY. SERVICE. DEPENDABILITY.

Luff Industries' business is built on producing innovative, high quality products for the world material handling markets.
With a focus on quality, service and competitive prices, Luff works with its customers to provide exceptional solutions.

*See back cover for detailed terms & conditions

CONTENTS

2400 SERIES

8

Equal Roll Steel 8
Equal Roll Impact 9
Unequal Roll Steel 10
Unequal Roll Impact 10
Trough Training 11
Flat Impact 12
Flat Carrying 12
Rubber Disc Return 13
Steel Return Roll 13
Steel Return Training 14
Disc Return Training 14
Center Mount V-Trough 16
High Speed Spreader 16
Channel Insets 17
Channel Inset Returns 17
Channel Mount 18
Steel Return - Live Shaft 18
Rubber Disc Return - Live Shaft 19

CEMA B

3400 SERIES

20

Equal Roll Steel 20
Equal Roll Impact 22
Offset Center Roll Steel 24
Trough Training 26
Unequal Roll Steel 28
Unequal Roll Impact 29
Flat Carrying 30
Flat Impact 30
Steel Return Roll 31
Rubber Disc Return 31
Steel V-Returns 32
Disc V-Returns 33
Steel Return Training 34
Disc Return Training 35
Flat Impact - Live Shaft 36
Steel Return - Live Shaft 36
Rubber Disc Return - Live Shaft 37
2400/3400 Steel Rollers 38
2400/3400 Impact Rollers 39
2400/3400 Steel Return Rollers 40
2400/3400 Disc Return Rollers 41

CEMA C/D

4500-5600 SERIES

42

CEMA E
Equal Roll Steel 42
Equal Roll Impact 44
Steel Return Roller 46
Disc Return Roller 46
4500 Steel Rollers 47
4500 Impact Rollers 47

CEMA F
Equal Roll Steel 48
Equal Roll Impact 48

CEMA E/F

ACCESSORIES

49

2400/3400/4500 Brackets 68
Anti-lock Shield/High Moisture Seal 52
Belt Brush Cleaning Unit 60
Belt Cleaner/Scraper 64
Cambaroll 50
Catenary/Garland 49
Cleanweave 50
Composite Rolls 49
Dodge Drive Package 60
Guide Rollers 67
Gypsum Rollers 51
Impact Beds 61
Lagging 58
Locking Clips 51
Pulleys: Bucket Elevator Pulley 57
Pulleys: Helix Pulley 57
Pulleys: Magnetic 57
Pulleys: Sawmill Pulleys 58
Pulleys: Spiral Drum/Wing 56
Pulleys: XT Style Drum/Wing 55
Pulleys: QD Style Drum/Wing 55
Pulleys: Wear Wolf Wing Pulley 56
Retrofits 53
Return Roller Guards 63
Rubber Discs 68
Safety Net 64
Slider/Slider Impact Beds 62
Stainless Steel Products 53
Take-up Frames 65
Telescopic Take-up 66

Data/Reference Sheets
Roller Data Sheet
Conveyor Product Data Sheet
Engineering Request Form
Load Rating Reference Guide
Bracket Data Sheet
Terms & Conditions

ACCESSORIES

CONTACT

LUFF INDUSTRIES LTD.

Head Office
235010 Wrangler Road
Rocky View (Calgary), Alberta T1X 0K3

TF: 1.888.349.LUFF (5833)
P: 403.279.3555
F: 403.279.5709

E: info@luffindustries.com
W: www.luffindustries.com

Ontario Branch, CAN
225 Hughes Road
Orillia, Ontario L3V 2M2

TF: 1.888.349.LUFF (5833)
P: 705.327.7377
F: 403.279.5709

E: info@luffindustries.com
W: www.luffindustries.com

Tennessee Branch, USA
3310 Ambrose Avenue
Nashville, Tennessee 37207

TF: 1.888.349.LUFF (5833)
F: 403.279.5709

E: info@luffindustries.com
W: www.luffindustries.com

ABOUT

As a manufacturer of premium quality conveyor components for over 42 years, Luff has become a respected leader in the industry. Offering a full line of idlers that feature a patented high strength polymer end cap, unmatched sealing protection and can be retrofitted to any existing frame. Luff pulleys are built to withstand the demands of the toughest conveyor applications with a rim thickness that is typically 50% heavier than the competition. The heavy-duty shell absorbs more stress, reduces shell deflection and protects against abrasive wear.

Well-known for these innovative products, Luff conveyor components can be found in a variety of heavy industrial material handling applications in North America and all over the world.

Some of the industries where you will find Luff products include:

- Aggregate
- Mining
- Forestry
- Oil and Gas
- Frac Sand
- Original Equipment Manufacturers (OEMs)
- Construction
- Gypsum (Wallboard)
- Sulfur Handling
- Power Generation
- Recycling
- Ship Loading
- Side Wall Belt Systems

Luff's in-house engineering team is ready to assist with any modifications or design requirements for different applications to ensure a longer life and optimum performance. With a 66,000+ square foot manufacturing facility utilizing advanced robotics and CNC machines for manufacturing, all products conform to CEMA standards and pass through a full ISO 9001 quality inspection. All Luff products come backed with a full two-year warranty.

Luff delivers dependable, quality products with industry-leading manufacturing lead times. This quick turn around time helps minimize downtime while reducing operating costs for its customers.

Luff has one of the most complete product lines available, so contact Luff Industries today and see how we can increase your ***Conveying Performance.***

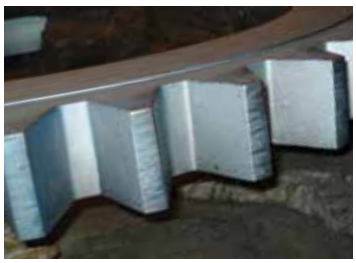

ADVANTAGES

THE POWER OF POLYMER

THE SOLUTION TO BEARING CONTAMINATION AND COSTLY IDLER MAINTENANCE

An alternative to steel rolls of the past is Luff's innovative, maintenance-free idler. These idlers utilize a polymer end cap design patented by Luff Industries Ltd. All CEMA B, C and D idlers feature polymer end caps.

Luff has incorporated the use of high-strength polymer, surrounding a maintenance-free bearing in its end cap design. This design allows the idler to be a corrosion resistant, lightweight, longer lasting alternative to regular steel caps.

A triple labyrinth seal and felt ring, both encased in the polymer end cap using ultrasonic welding techniques, ensures a seal that will last longer than conventional methods.

After assembly, the end cap passes through a rigid ISO 9001 (International Standards Organization) quality inspection, before becoming a key component in a Luff conveyor idler.

THE PULLEY ADVANTAGE

ADVANTAGES OF THE LUFF PULLEY

Luff Industries Ltd. manufactures industry-leading pulleys fabricated from heavy schedule pipe. The machined large trapezoidal crown angle that ensures the maximum concentricity of the pulley is 0.0000–0.030", compared to the industry standard of 0.080"–0.125".

Luff's customers receive significant advantages including:

- Typically concentricity provides maximum contact with the belt, consistent belt content discharge, less deflection of shaft and reduced stress on the bearings.
- A 50% thicker pulley shell absorbs more stress and protects against abrasive wear.
- Large crown angle provides increased belt tracking capabilities.

A strong, durable pulley dramatically decreases maintenance costs and belt wear which allows for significant long-term cost savings in even the toughest applications.

LUFF ACCESSORIES

QUALITY CONVEYOR PRODUCTS NEED QUALITY ACCESSORIES

A complete line of conveyor accessories is available from Luff Industries. From belt cleaning systems to impact beds, lagging, urethane products, take-up frames, shafting and more. Luff Industries is able to outfit your conveyor with the industry-leading product it demands.

Luff stands behind all of its product with a full two-year warranty. This ensures peace of mind, while equipping your conveyor with the latest technology available, at competitive prices.

Offering only the highest quality products and accessories available, Luff will reduce downtime and maintenance costs for your company.

With product built in-house at Luff's state-of-the-art manufacturing plant in Calgary, Alberta, Canada, Luff maintains full control over quality of the product it manufactures. This provides the customer with the ultimate assurance that product received will meet and exceed all expectations.

Browse the Luff catalogue and see how you can increase your *conveying performance*.

QUALITY IS STANDARD

PROVIDING CUSTOMERS WITH A SIGNIFICANT ADVANTAGE

Luff idlers and pulleys pass through a full ISO 9001 quality inspection before becoming a key component in your conveyor system.

SKF Equipped Partner, supplying customers with the highest quality bearings available on the market.

Thoroughly tested and proven, all Luff products meet the requirements of the most demanding conveyor systems. Product can be custom built to the same standards as in-stock product, with an industry leading turn around time.

Luff product also conforms to CEMA (Conveyor Equipment Manufacturers Association) standards, along with other industrial standards, ensuring the best available product on the market today.

If you would like more information on Luff Quality Standards, call Luff's experienced sales team today, toll-free, at **1.888.349.LUFF (5833)**.

IDLER PART NUMBER GUIDE

2400/3400/4500/5600 SERIES IDLERS

EXAMPLE PART NUMBER: 24-253-HSE-HMS-6

24	–	2	5	3	–	HSE	–	HMS-6
BELT WIDTH		TROUGHING ANGLE	ROLL DIAMETER	CEMA RATING				

TROUGHING ANGLE	ROLL DIAMETER	CEMA RATING
0 = 0°	4"	2 = B
1 = 10°	5"	3 = C
2 = 20°	6"	4 = D
3 = 35°	7"	5 = E
4 = 45°	8"	6 = F

TYPE OF IDLER	
HSE	Equal Roll Steel
HDE	Equal Roll Impact
HCE	Equal Roll Composite
HSEO	Offset Center Roll Steel
HSTE-U	Trough Training w/ 4 UGR
HSP	Unequal Roll Steel
HSP-9	Unequal Roll Steel w/ 9" wings
HDP	Unequal Roll Impact (steel wings)
HS	Flat Carrying Steel w/ Brackets
HD	Flat Impact Discs w/ Brackets
HS-1.5	Flat Carrying Steel w/ 1.5" Brackets
HD-1.5	Flat Impact Discs w/ 1.5" Brackets
OSR	Steel Return w/ Offset Brackets
ODR	Disc Return w/ Offset Brackets
OCR	Composite Return w/ Offset Brackets
HSR-1.5	Steel Return w/ 1.5" Brackets
HDR-1.5	Disc Return w/ 1.5" Brackets
OUDR	Urethane Disc w/ Offset Brackets
HSR	Steel Return w/ Straight Brackets
HDR	Disc Return w/ Straight Brackets
HSRT	Steel Return Training
HDRT	Disc Return Training
HSRT-1.5	Steel Return Training w/ 1.5" Drop Frame
HDRT-1.5	Disc Return Training w/ 1.5" Drop Frame
HDL	Flat Impact Live Shaft
SLR	Steel Return Live Shaft
DLR	Rubber Disc Return Live Shaft
HSEC	Equal Roll Steel Catenary
HDEC	Equal Roll Impact Catenary

OPTIONS	
HMS-6	High Moisture Seal (x6)
SAL-6	Safety Anti-lock Shield (x6)
SCALE	Scale Quality Assembly
REM	Removable Endplates
ADJ	Adjustable Assembly
REV	Reversible Training Frame
AI	All Impact Unequal Assembly
SS	Stainless Steel Assembly
WB	Wide Base
.250	1/4" Wall Tubing

SKF Equipped

IDLERS STYLES

EQUAL ROLL STEEL

EQUAL ROLL IMPACT

OFFSET CENTER ROLL STEEL

TROUGH TRAINING

UNEQUAL ROLL IMPACT

UNEQUAL ROLL STEEL

STEEL RETURN ROLL

RUBBER DISC RETURN

STEEL V-RETURN

DISC V-RETURN

STEEL RETURN TRAINING

DISC RETURN TRAINING

FLAT CARRYING

FLAT IMPACT

CHANNEL INSET

CHANNEL INSET RETURN

STEEL RETURN – LIVE SHAFT

FLAT IMPACT – LIVE SHAFT

DISC RETURN – LIVE SHAFT

CATENARY STEEL

CAMBAROLL

EQUAL ROLL STEEL

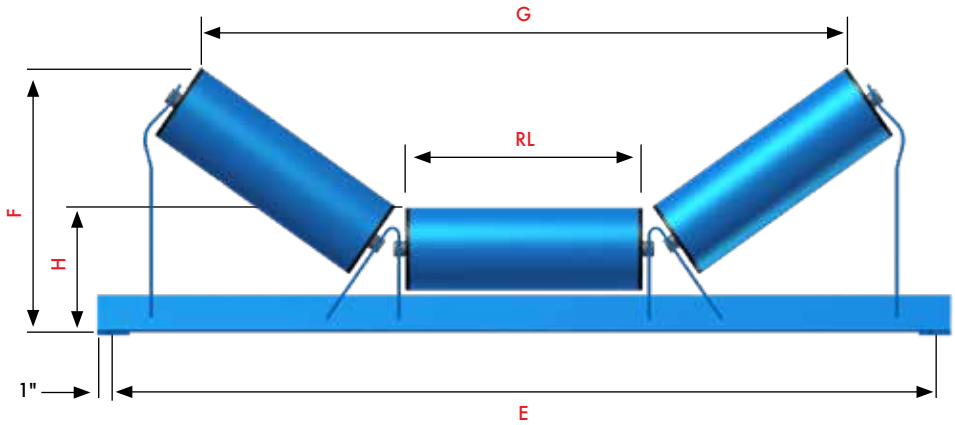

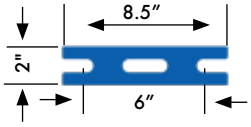

CEMA B 4-INCH DIAMETER

	BELT	E	F	G	H	RL	PART #	WEIGHT
20° ANGLE	18"	27"	9.75"	21.688"	7.188"	6.75"	18-242-HSE	31 lbs.
	24"	33"	10.4375"	27.5"	7.188"	8.75"	24-242-HSE	36 lbs.
	30"	39"	11.063"	33.25"	7.188"	10.75"	30-242-HSE	45 lbs.
	36"	45"	11.75"	39"	7.188"	12.75"	36-242-HSE	51 lbs.
	42"	51"	12.5"	44.75"	7.375"	14.75"	42-242-HSE	74 lbs.
	48"	57"	13.4375"	50.5"	7.375"	16.75"	48-242-HSE	84 lbs.

	BELT	E	F	G	H	RL	PART #	WEIGHT
35° ANGLE	18"	27"	11.25"	19.375"	7.188"	6.75"	18-342-HSE	33 lbs.
	24"	33"	12.4375"	24.688"	7.188"	8.75"	24-342-HSE	38 lbs.
	30"	39"	13.562"	29.9375"	7.188"	10.75"	30-342-HSE	47 lbs.
	36"	45"	14.688"	32.25"	7.188"	12.75"	36-342-HSE	53 lbs.
	42"	51"	15.875"	40.5"	7.375"	14.75"	42-342-HSE	76 lbs.
	48"	57"	17.063"	45.813"	7.375"	16.75"	48-342-HSE	86 lbs.

CEMA B 5-INCH DIAMETER

	BELT	E	F	G	H	RL	PART #	WEIGHT
20° ANGLE	18"	27"	10.188"	21.375"	7.688"	6.75"	18-252-HSE	35 lbs.
	24"	33"	10.875"	27.125"	7.688"	8.75"	24-252-HSE	41 lbs.
	30"	39"	11.562"	32.875"	7.688"	10.75"	30-252-HSE	51 lbs.
	36"	45"	12.25"	38.625"	7.688"	12.75"	36-252-HSE	57 lbs.
	42"	51"	13"	44.375"	7.875"	14.75"	42-252-HSE	81 lbs.
	48"	57"	13.625"	50.188"	7.875"	16.75"	48-252-HSE	92 lbs.

	BELT	E	F	G	H	RL	PART #	WEIGHT
35° ANGLE	18"	27"	11.625"	18.75"	7.688"	6.75"	18-352-HSE	37 lbs.
	24"	33"	12.813"	24.125"	7.688"	8.75"	24-352-HSE	43 lbs.
	30"	39"	14"	29.375"	7.688"	10.75"	30-352-HSE	53 lbs.
	36"	45"	15.125"	34.625"	7.688"	12.75"	36-352-HSE	60 lbs.
	42"	51"	16.3125"	39.9375"	7.875"	14.75"	42-352-HSE	83 lbs.
	48"	57"	17.4375"	45.188"	7.875"	16.75"	48-352-HSE	94 lbs.

EQUAL ROLL IMPACT

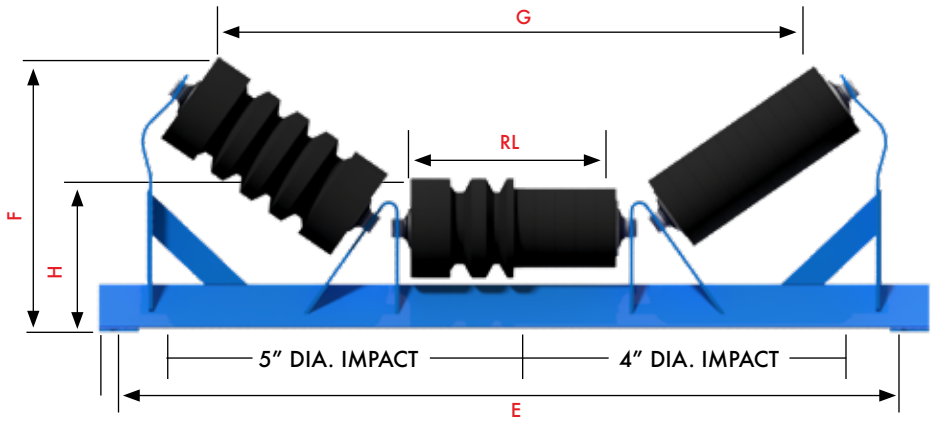

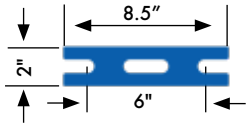

CEMA B 4-INCH DIAMETER

20° ANGLE

BELT	E	F	G	H	RL	PART #	WEIGHT
18"	27"	9.75"	21.5"	7.188"	6.125"	18-242-HDE	37 lbs.
24"	33"	10.5"	27.25"	7.188"	8.125"	24-242-HDE	45 lbs.
30"	39"	11.125"	33"	7.188"	10.125"	30-242-HDE	55 lbs.
36"	45"	11.875"	38.75"	7.188"	12.125"	36-242-HDE	65 lbs.
42"	51"	12.5"	44.5"	7.375"	14.125"	42-242-HDE	80 lbs.
48"	57"	13.25"	50.25"	7.375"	16.125"	48-242-HDE	89 lbs.

35° ANGLE

BELT	E	F	G	H	RL	PART #	WEIGHT
18"	27"	11.5"	19.25"	7.188"	6.125"	18-342-HDE	37 lbs.
24"	33"	12.75"	24.5"	7.188"	8.125"	24-342-HDE	45 lbs.
30"	39"	13.875"	29.75"	7.188"	10.125"	30-342-HDE	55 lbs,
36"	45"	14.563"	35"	7.188"	12.125"	36-342-HDE	65 lbs.
42"	51"	16.125"	40.375"	7.375"	14.125"	42-342-HDE	80 lbs.
48"	57"	17.25"	45.625"	7.375"	16.125"	48-342-HDE	89 lbs.

CEMA B 5-INCH DIAMETER

20° ANGLE

BELT	E	F	G	H	RL	PART #	WEIGHT
18"	27"	10.125"	20.375"	7.688"	6.5"	18-252-HDE	40 lbs.
24"	33"	10.75"	26.125"	7.688"	8.5"	24-252-HDE	48 lbs,
30"	39"	11.5"	32"	7.688"	10.5"	30-252-HDE	61 lbs.
36"	45"	12.125"	37.75"	7.688"	12.5"	36-252-HDE	70 lbs.
42"	51"	18.875"	43.5"	7.875"	14.5"	42-252-HDE	85 lbs.
48"	57"	13.5"	49.25"	7.875"	16.5"	48.252-HDE	95 lbs.

35° ANGLE

BELT	E	F	G	H	RL	PART #	WEIGHT
18"	27"	11.75"	18"	7.688"	6.5"	18-352-HDE	40 lbs.
24"	33"	12.875"	23.25"	7.688"	8.5"	24-352-HDE	48 lbs.
30"	39"	14"	28.5"	7.688"	10.5"	30-352-HDE	61 lbs.
36"	45"	15.25"	33.875"	7.688"	12.5"	36-352-HDE	70 lbs.
42"	51"	16.375"	39.125"	7.875"	14.5"	42-352-HDE	85 lbs.
48"	57"	17.5"	44.375"	7.875"	16.5"	48-352-HDE	95 lbs.

UNEQUAL ROLL STEEL

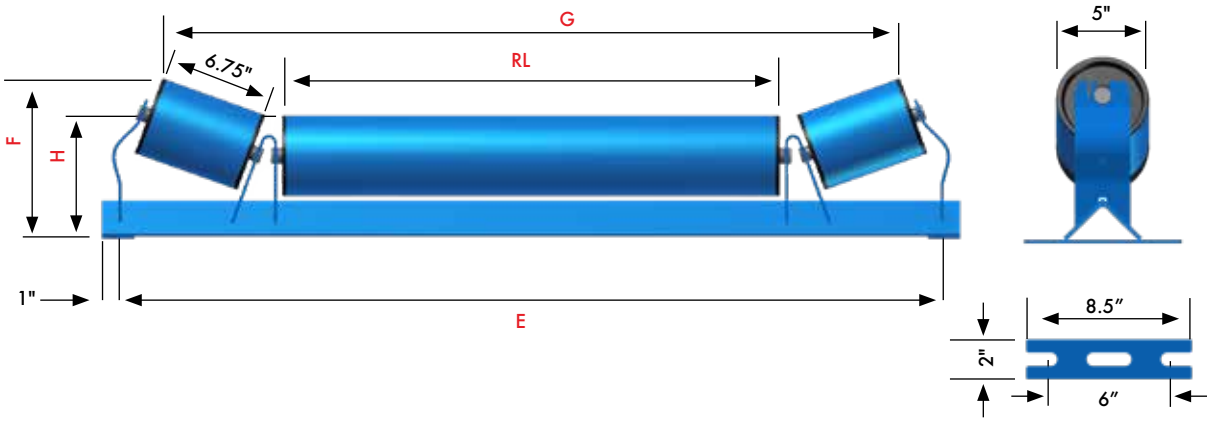

CEMA B 5-INCH DIAMETER

20° ANGLE

BELT	E	F	G	H	RL	PART #	WEIGHT
24"	33"	11.688"	27.125"	7.688"	12.75"	24-252-HSP	43 lbs.
30"	39"	10.25"	33.125"	7.688"	18.75"	30-252-HSP	53 lbs.
36"	45"	10.25"	39.125"	7.688"	24.75"	36-252-HSP	59 lbs.
42"	51"	11.75"	45.125"	7.875"	30.75"	42-252-HSP	71 lbs.
48"	57"	11.75"	51.125"	7.875"	36.75"	48-252-HSP	79 lbs.

4-INCH DIAMETER ALSO AVAILABLE

UNEQUAL ROLL IMPACT

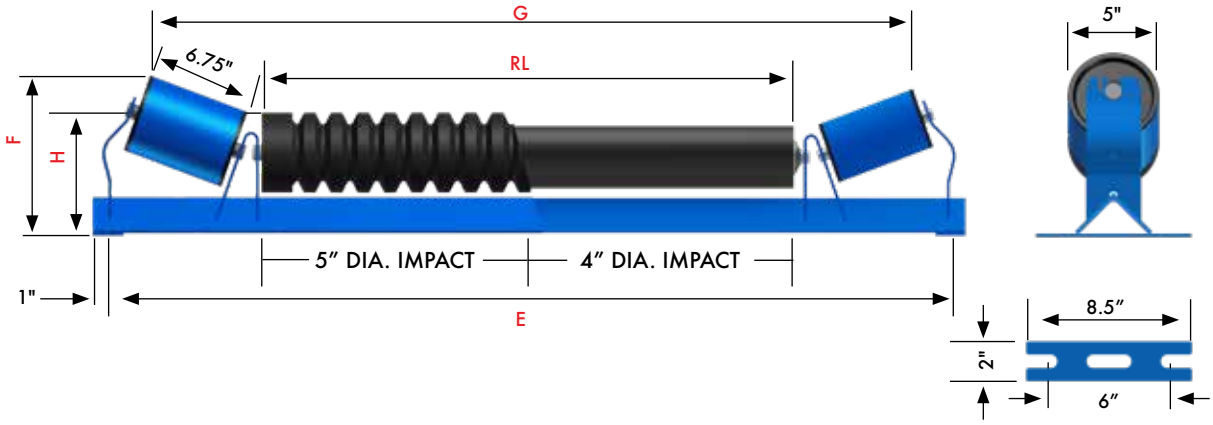

CEMA B 5-INCH DIAMETER

20° ANGLE

BELT	E	F	G	H	RL	PART #	WEIGHT
24"	33"	11.688"	27.125"	7.688"	12.5"	24-252-HDP	46 lbs.
30"	39"	10.25"	33.125"	7.688"	18.5"	30-252-HDP	59 lbs.
36"	45"	10.25"	39.125"	7.688"	24.5"	36-252-HDP	67 lbs.
42"	51"	11.75"	45.125"	7.875"	30.5"	42-252-HDP	82 lbs.
48"	57"	11.75"	51.125"	7.875"	36.5"	48-252-HDP	92 lbs.

4 & 5-INCH ALL IMPACT ALSO AVAILABLE (HDP-AI)

TROUGH TRAINING

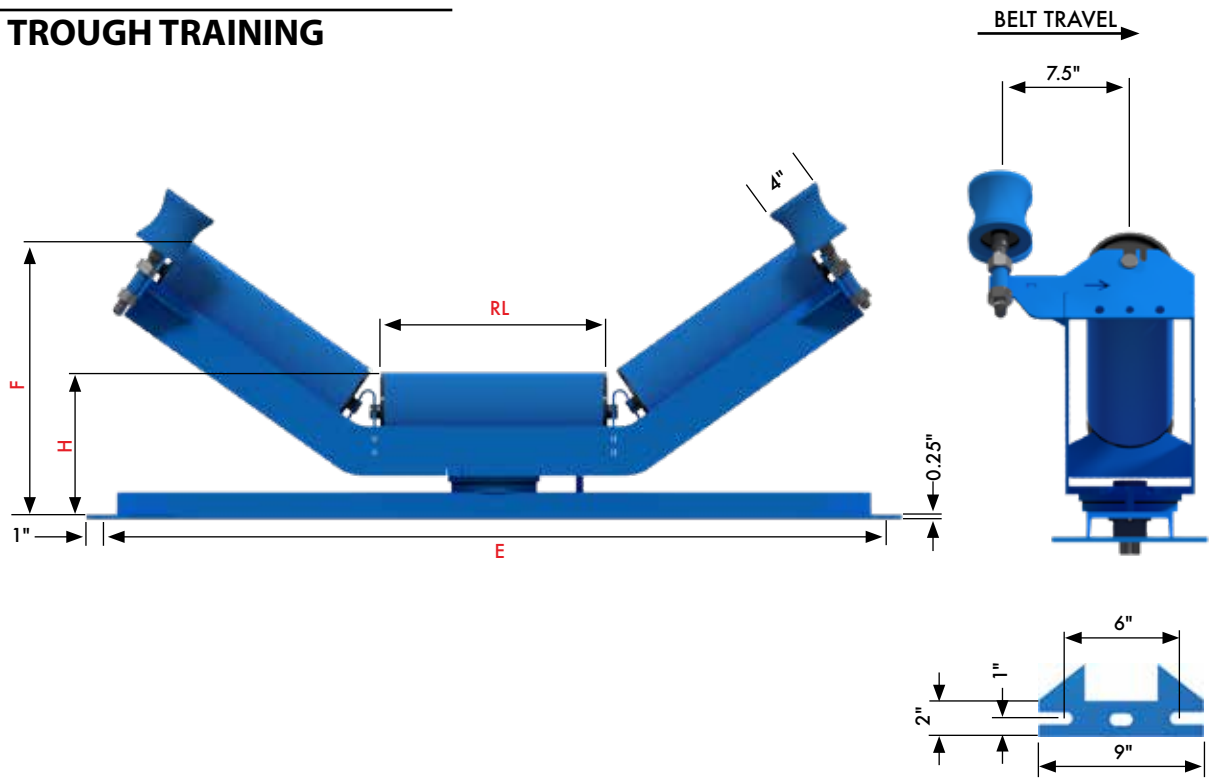

CEMA B — 4-INCH DIAMETER

20° ANGLE

BELT	E	F	H	RL	PART #	WEIGHT
18″	27″	10.25″	8.25″	6.75″	18-242-HSTE-U	61 lbs.
24″	33″	11″	8.25″	8.75″	24-242-HSTE-U	68 lbs.
30″	39″	11.625″	8.25″	10.75″	30-242-HSTE-U	84 lbs.
36″	45″	12.375″	8.25″	12.75″	36-242-HSTE-U	94 lbs.

35° ANGLE

BELT	E	F	H	RL	PART #	WEIGHT
18″	27″	12″	8.25″	6.75″	18-342-HSTE-U	64 lbs.
24″	33″	13.25″	8.25″	8.75″	24-342-HSTE-U	71 lbs.
30″	39″	14.375″	8.25″	10.75″	30-342-HSTE-U	88 lbs.
36″	45″	15.5″	8.25″	12.75″	36-342-HSTE-U	98 lbs.

CEMA B — 5-INCH DIAMETER

20° ANGLE

BELT	E	F	H	RL	PART #	WEIGHT
18″	27″	10.75″	8.75″	6.75″	18-252-HSTE-U	65 lbs.
24″	33″	11.5″	8.75″	8.75″	24-252-HSTE-U	73 lbs.
30″	39″	12.125″	8.75″	10.75″	30-252-HSTE-U	90 lbs.
36″	45″	12.875″	8.75″	12.75″	36-252-HSTE-U	100 lbs.
42″	51″	13.5″	8.75″	14.75″	42-252-HSTE-U	114 lbs.
48″	57″	14.25″	8.75″	16.75″	48-252-HSTE-U	121 lbs.

35° ANGLE

BELT	E	F	H	RL	PART #	WEIGHT
18″	27″	12.5″	8.75″	6.75″	18-352-HSTE-U	68 lbs.
24″	33″	13.5″	8.75″	8.75″	24-352-HSTE-U	76 lbs.
30″	39″	14.75″	8.75″	10.75″	30-352-HSTE-U	94 lbs.
36″	45″	15.875″	8.75″	12.75″	36-352-HSTE-U	104 lbs.
42″	51″	17″	8.75″	14.75″	42-352-HSTE-U	115 lbs.
48″	57″	18.125″	8.75″	16.75″	48-352-HSTE-U	123 lbs.

FLAT IMPACT

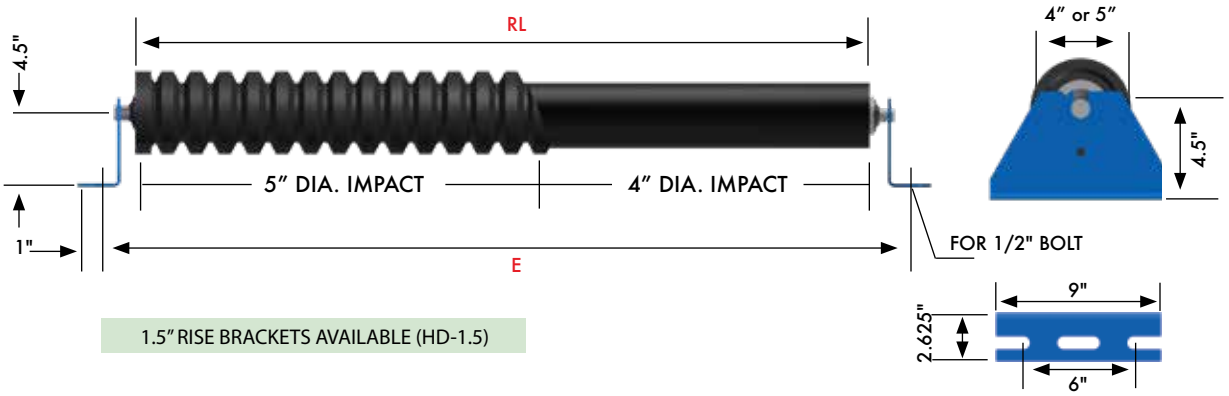

1.5" RISE BRACKETS AVAILABLE (HD-1.5)

CEMA B — 5-INCH DIAMETER

SPECS

BELT	E	RL	PART #	WEIGHT
18"	27"	22"	18-052-HD	27 lbs.
24"	33"	28"	24-052-HD	34 lbs.
30"	39"	34"	30-052-HD	41 lbs.
36"	45"	40"	36-052-HD	47 lbs.
42"	51"	46"	42-052-HD	54 lbs.
48"	57"	52"	48-052-HD	61 lbs.

4-INCH DIAMETER ALSO AVAILABLE

FLAT CARRYING

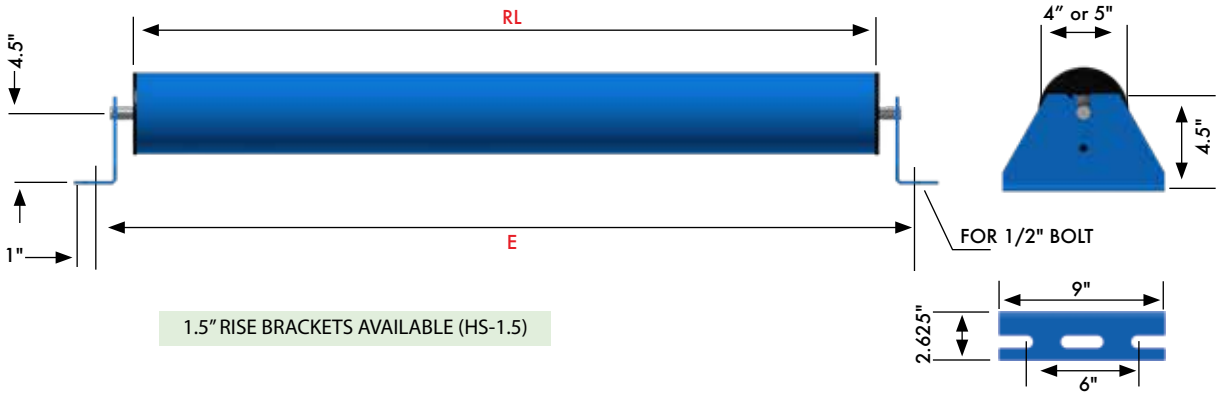

1.5" RISE BRACKETS AVAILABLE (HS-1.5)

CEMA B — 4-INCH DIAMETER

SPECS

BELT	E	RL	PART #	WEIGHT
18"	27"	21.75"	18-042-HS	15 lbs.
24"	33"	27.75"	24-042-HS	18 lbs.
30"	39"	33.75"	30-042-HS	22 lbs.
36"	45"	39.75"	36-042-HS	25 lbs.
42"	51"	45.75"	42-042-HS	33 lbs.
48"	57"	51.75"	48-042-HS	37 lbs.

CEMA B — 5-INCH DIAMETER

SPECS

BELT	E	RL	PART #	WEIGHT
18"	27"	21.75"	18-052-HS	18 lbs.
24"	33"	27.75"	24-052-HS	22 lbs.
30"	39"	33.75"	30-052-HS	26 lbs.
36"	45"	39.75"	36-052-HS	30 lbs.
42"	51"	45.75"	42-052-HS	37 lbs.
48"	57"	51.75"	48-052-HS	41 lbs.

RUBBER DISC RETURN

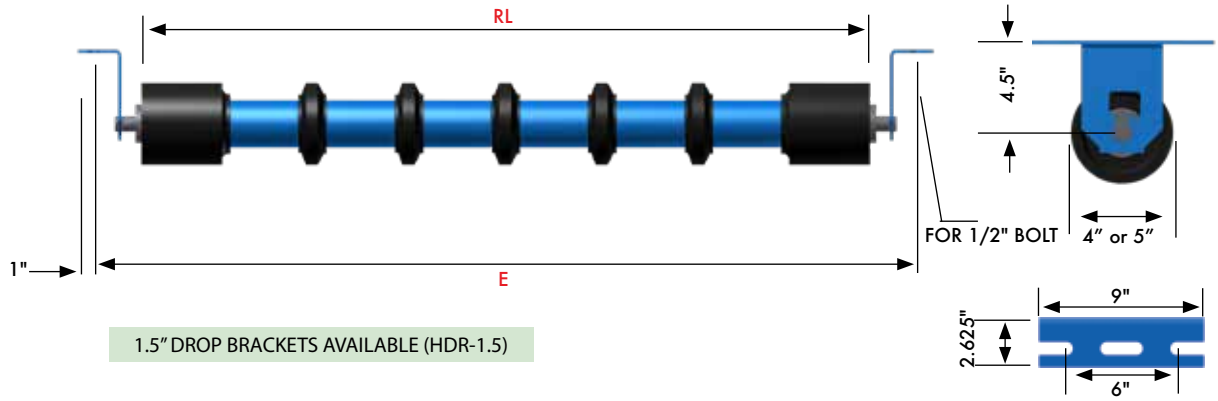

1.5" DROP BRACKETS AVAILABLE (HDR-1.5)

SELFCLEANING

SELF-CLEANING RUBBER DISC RETURN
The Self-Cleaning Rubber Disc Return reduces build-up on the roller, prolonging the belt life of your conveyor system.

CEMA B — 4-INCH DIAMETER

SPECS

BELT	E	RL	PART #	WEIGHT
18"	27"	21.75"	18-042-HDR	21 lbs.
24"	33"	27.75"	24-042-HDR	26 lbs.
30"	39"	33.75"	30-042-HDR	31 lbs.
36"	45"	39.75"	36-042-HDR	36 lbs.
42"	51"	45.75"	42-042-HDR	41 lbs.
48"	57"	51.75"	48-042-HDR	46 lbs.

5-INCH DIAMETER ALSO AVAILABLE

STEEL RETURN ROLL

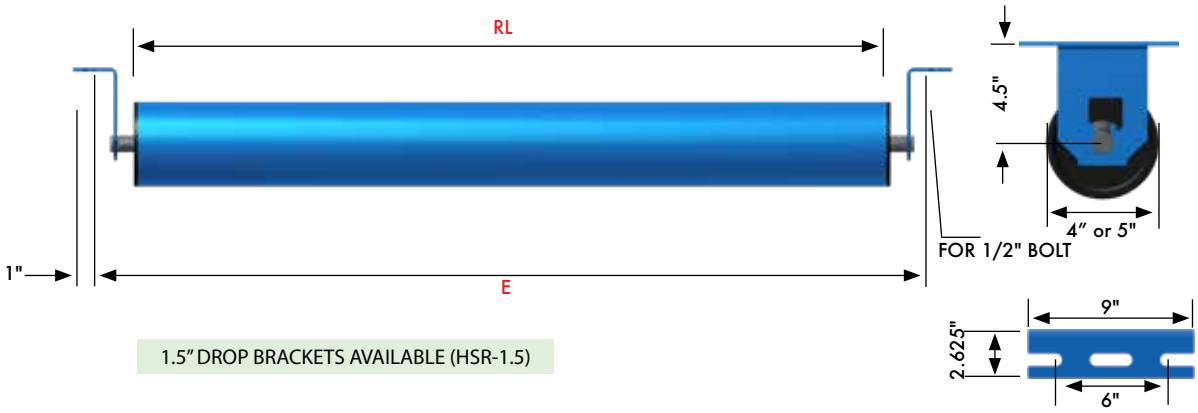

1.5" DROP BRACKETS AVAILABLE (HSR-1.5)

CEMA B — 4-INCH DIAMETER

SPECS

BELT	E	RL	PART #	WEIGHT
18"	27"	21.75"	18-042-HSR	15 lbs.
24"	33"	27.75"	24-042-HSR	18 lbs.
30"	39"	33.75"	30-042-HSR	22 lbs.
36"	45"	39.75"	36-042-HSR	25 lbs.
42"	51"	45.75"	42-042-HSR	33 lbs.
48"	57"	51.75"	48-042-HSR	37 lbs.

CEMA B — 5-INCH DIAMETER

SPECS

BELT	E	RL	PART #	WEIGHT
18"	27"	21.75"	18-052-HSR	18 lbs.
24"	33"	27.75"	24-052-HSR	22 lbs.
30"	39"	33.75"	30-052-HSR	26 lbs.
36"	45"	39.75"	36-052-HSR	30 lbs.
42"	51"	45.75"	42-052-HSR	37 lbs.
48"	57"	51.75"	48-052-HSR	41 lbs.

STEEL RETURN TRAINING

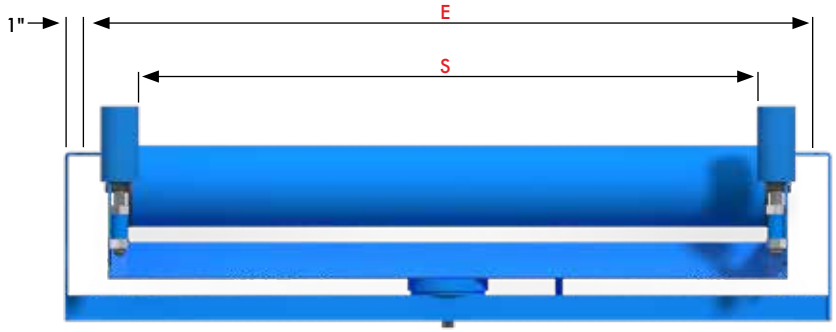

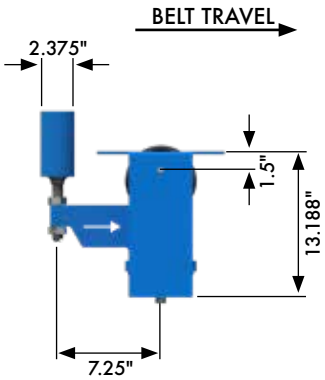

4.5″ DROP FRAME AVAILABLE (HSRT-4.5)

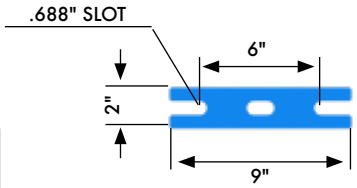

SPECS

CEMA B			4-INCH DIAMETER	
BELT	E	S	PART #	WEIGHT
18″	27″	20″	18-042-HSRT	59 lbs.
24″	33″	26″	24-042-HSRT	66 lbs.
30″	39″	32″	30-042-HSRT	84 lbs.
36″	45″	38″	36-042-HSRT	93 lbs.

SPECS

CEMA B			5-INCH DIAMETER	
BELT	E	S	PART #	WEIGHT
18″	27″	20″	18-052-HSRT	62 lbs.
24″	33″	26″	24-052-HSRT	70 lbs.
30″	39″	32″	30-052-HSRT	88 lbs.
36″	45″	38″	36-052-HSRT	98 lbs.
42″	51″	44″	42-052-HSRT	103 lbs.
48″	57″	50″	48-052-HSRT	110 lbs.

DISC RETURN TRAINING

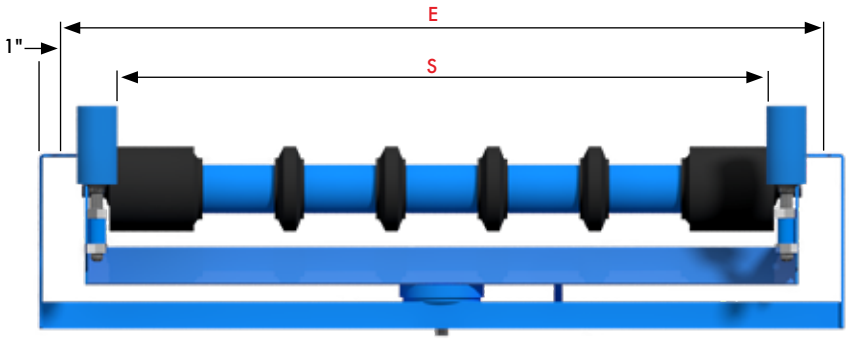

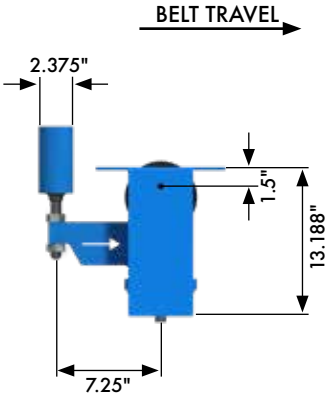

4.5″ DROP FRAME AVAILABLE (HDRT-4.5)

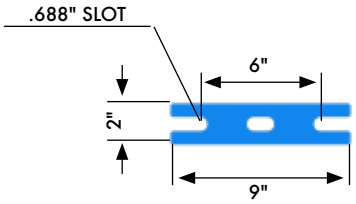

SPECS

CEMA B			5-INCH DIAMETER	
BELT	E	S	PART #	WEIGHT
18″	27″	20″	18-052-HDRT	65 lbs.
24″	33″	26″	24-052-HDRT	74 lbs.
30″	39″	32″	30-052-HDRT	93 lbs.
36″	45″	38″	36-052-HDRT	104 lbs.
42″	51″	44″	42-052-HDRT	127 lbs.
48″	57″	50″	48-052-HDRT	140 lbs.

FEATURES

- Available in 4" and 5" diameters
- Polymer Endcap
- Shell standard 0.125"

20 mm" Shaft	6304 Bearing	HD	4" and 5" Rolls Available

- Anti-Lock Shield/High Moisture Seal optional
- Triple labyrinth seal
- 6204/6304 SKF ball bearing
- 20 mm shaft
- Standard and custom rolls available
- Unmatched Luff quality complete with 2-year warranty

QUICK REFERENCE

CEMA B	LIGHT DUTY	UP TO 800 STPH (LOW TONNAGE)	SMALL LUMP SIZE

CENTER MOUNT V-TROUGH

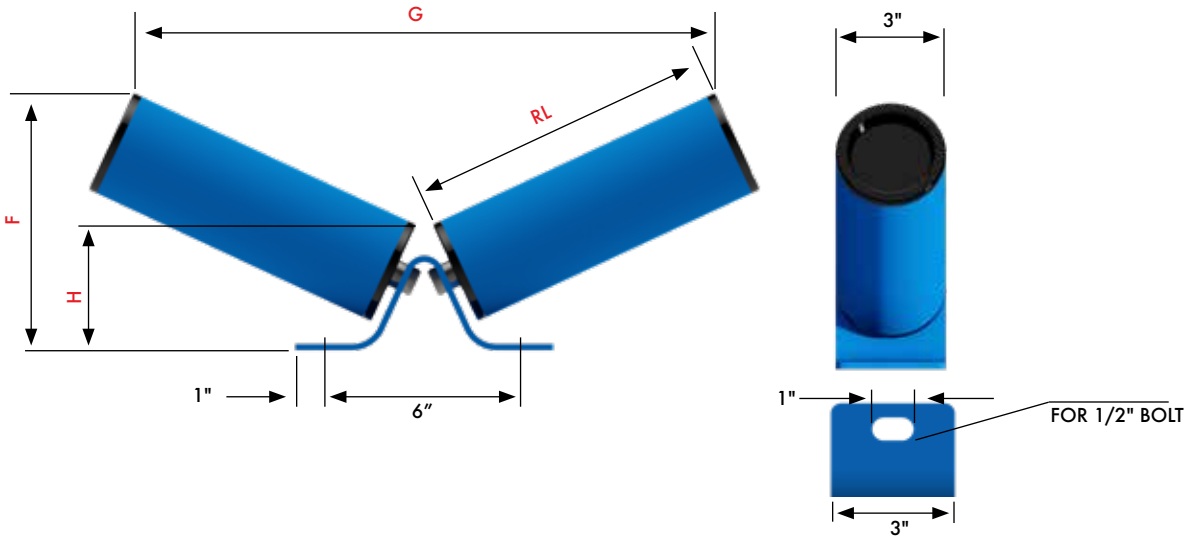

CEMA B 3-INCH DIAMETER

25° ANGLE

BELT	F	G	H	RL	PART #	WEIGHT
8"	5.375"	9.125"	3.625"	4.75"	8B-325-SV	7.0 lbs.
10"	5.875"	11"	3.625"	5.75"	10B-325-SV	7.9 lbs.
12"	6.25"	12.75"	3.625"	6.75"	12B-325-SV	8.8 lbs.
14"	6.75"	14.625"	3.625"	7.75"	14B-325-SV	9.7 lbs.
16"	7.125"	16.375"	3.625"	8.75"	16B-325-SV	10.6 lbs.
18"	7.5"	18.25"	3.625"	9.75"	18B-325-SV	11.5 lbs.

HIGH SPEED SPREADER

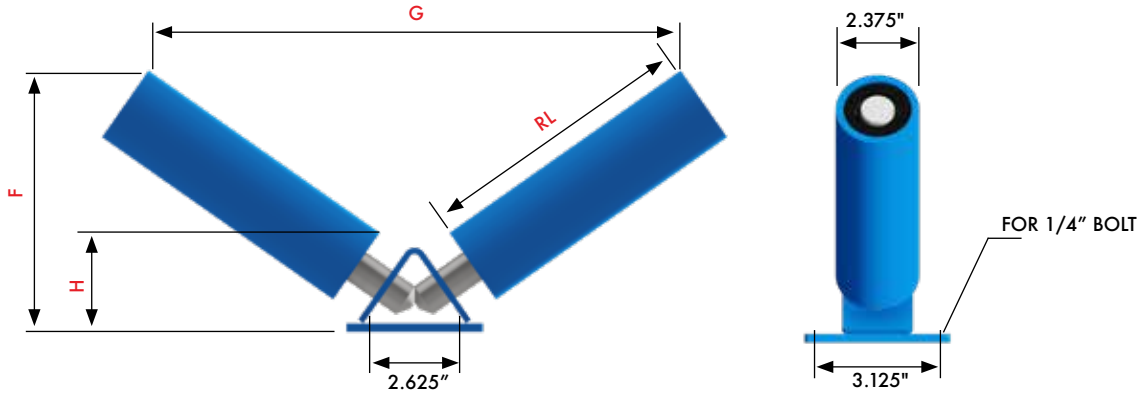

CEMA C 2.375-INCH DIAMETER

35° ANGLE

BELT	F	G	H	RL	PART #	WEIGHT
8"	5.875"	8.875"	2.562"	4.75"	8C-235-SS	18 lbs.
10"	5.688"	10.4375"	2.562"	5.75"	10C-235-SS	19 lbs.
12"	6.4375	12.063"	2.562"	6.75"	12C-235-SS	20 lbs.
14"	7"	13.750"	2.562"	7.75"	14C-235-SS	21 lbs.
16"	7.562"	16.375"	2.562"	8.75"	16C-235-SS	22 lbs.
18"	8.125"	17"	2.562"	9.75"	18C-235-SS	23 lbs.

CHANNEL INSETS

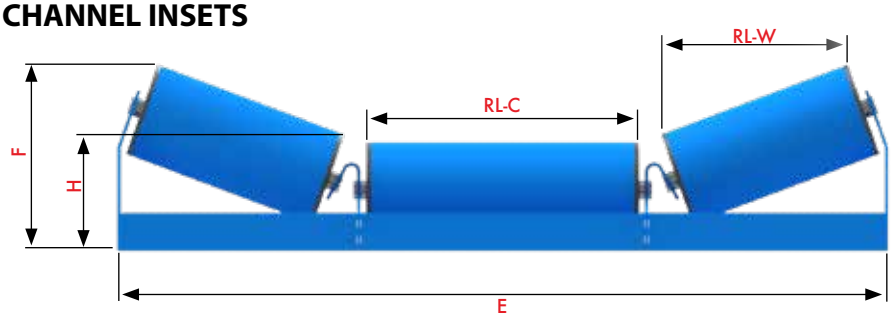

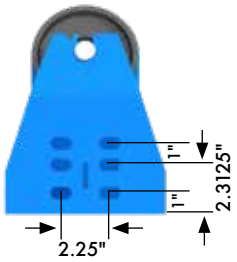

4-INCH DIAMETER

SPECS	E	F (20°)	F (35°)	H	RL-C	RL-W	PART #	WEIGHT	PART #	WEIGHT
	23.625″	7.562″	9.063″	5.125″	4.75″	6.75″	18B-420-CI	33 lbs.	18B-435-CI	34 lbs.
	29.625″	7.688″	9.063″	5.125″	10.75″	6.75″	24B-420-CI	36 lbs.	24B-435-CI	38 lbs.
	35.625″	8.375″	10.188″	5.125″	12.75″	8.75″	30B-420-CI	41 lbs.	30B-435-CI	43 lbs.
	41.625″	9.063″	11.3125″	5.125″	14.75″	10.75″	36B-420-CI	47 lbs.	36B-435-CI	50 lbs.
	47.625″	9.75″	12.5″	5.125″	16.75″	12.75″	42B-420-CI	51 lbs.	42B-435-CI	53 lbs.
	53.625″	9.75″	12.5″	5.125″	22.75″	12.75″	48B-420-CI	57 lbs.	48B-435-CI	59 lbs.

5-INCH DIAMETER

SPECS	E	F (20°)	F (35°)	H	RL-C	RL-W	PART #	WEIGHT	PART #	WEIGHT
	23.625″	7.688″	9.562″	5.688″	4.75″	6.75″	18C-520-CI	37 lbs.	18C-535-CI	38 lbs.
	29.625″	8.125″	9.562″	5.688″	10.75″	6.75″	24C-520-CI	41 lbs.	24C-535-CI	42 lbs.
	35.625″	8.813″	10.688″	5.688″	12.75″	8.75″	30C-520-CI	47 lbs.	30C-535-CI	49 lbs.
	41.625″	9.5″	11.813″	5.688″	14.75″	10.75″	36C-520-CI	54 lbs.	36C-535-CI	56 lbs.
	47.625″	10.188″	13″	5.688″	16.75″	12.75″	42C-520-CI	60 lbs.	42c-535-CI	62 lbs.
	53.625″	10.188″	13″	5.688″	22.75″	12.75″	48C-520-CI	66 lbs.	48C-535-CI	69 lbs.
	59.625″	10.188″	13″	5.688″	28.75″	12.75″	54C-520-CIQD	89 lbs.	54C-520-CIQD	91 lbs.
	65.625″	10.875″	14.125″	5.688″	31.75″	14.75″	60C-520-CIQD	98 lbs.	60C-535-CIQD	101 lbs.

FEATURES

- Available in 4" & 5" CEMA B; 5" & 6" CEMA C
- Low profile offers solution to areas with tight space constraints
- Custom built assemblies available
- Quarry-Duty (**QD**) models available
- Unmatched Luff quality complete with 2-year warranty.

CHANNEL INSET RETURN

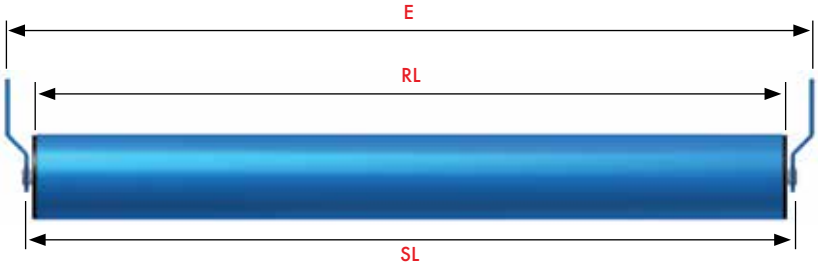

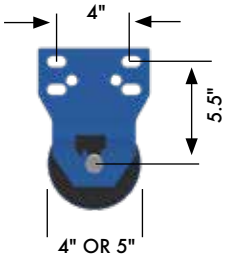

DISC RETURNS AVAILABLE

SPECS			4″ CEMA B		5″ CEMA B	
E	RL	SL	PART #	WEIGHT	PART #	WEIGHT
23.625″	20″	21.625″	18B-400-CI	15 lbs.	18B-500-CI	18 lbs.
29.625″	26″	27.625″	24B-400-CI	19 lbs.	24B-500-CI	22 lbs.
35.625″	32″	33.625″	30B-400-CI	24 lbs.	30B-500-CI	27 lbs.
41.625″	38″	39.625″	36C-400-CI	29 lbs.	36C-500-CI	32 lbs.
47.625″	44″	45.625″	42C-400-CI	33 lbs.	42C-500-CI	36 lbs.
53.625″	50″	51.625″	48C-400-CI	37 lbs.	48C-500-CI	40 lbs.

CHANNEL MOUNT

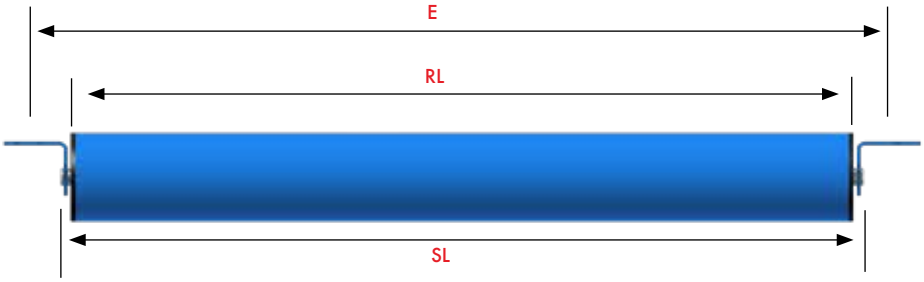

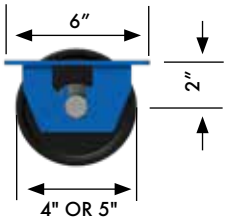

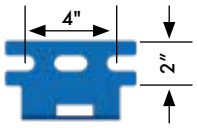

DISC RETURNS AVAILABLE

SPECS

			4" CEMA B		5" CEMA B	
E	RL	SL	PART #	WEIGHT	PART #	WEIGHT
26"	20"	21.625"	18B-400-CIR	15 lbs.	18B-500-CIR	18 lbs.
32"	26"	27.625"	24B-400-CIR	19 lbs.	24B-500-CIR	22 lbs.
38"	32"	33.625"	30B-400-CIR	24 lbs.	30B-500-CIR	27 lbs.
44"	38"	39.625"	36C-400-CIR	29 lbs.	36C-500-CIR	32 lbs.
50"	44"	45.625"	42C-400-CIR	33 lbs.	42C-500-CIR	36 lbs.
56"	50"	51.625"	48C-400-CIR	37 lbs.	48C-500-CIR	40 lbs.

STEEL RETURN — LIVE SHAFT

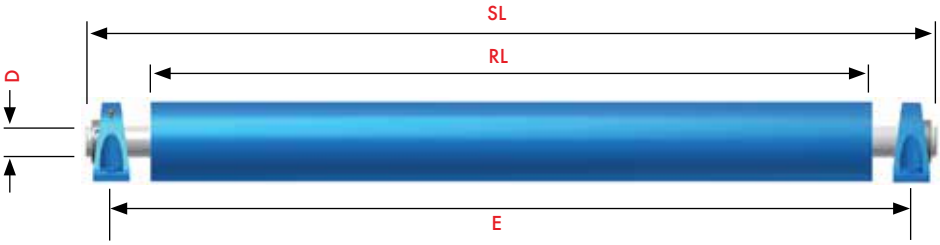

SPECS

CEMA B			5-INCH DIAMETER			
BELT	D	E	RL	SL	PART #	WEIGHT
18"	1.188"	27"	21.75"	30"	18-052-SLR	29 lbs.
24"	1.188"	33"	27.75"	36"	24-052-SLR	35 lbs.
30"	1.188"	39"	33.75"	42"	30-052-SLR	42 lbs.
36"	1.188"	45"	39.75"	48"	36-052-SLR	48 lbs.
42"	1.188"	51"	45.75"	54"	42-052-SLR	55 lbs.
48"	1.188"	57"	51.75"	60"	48-052-SLR	61 lbs.
54"	1.188"	63"	57.75"	66"	54-052-SLR	68 lbs.
60"	1.188"	69"	63.75"	72"	60-052-SLR	74 lbs.

SPECS

CEMA B			6-INCH DIAMETER			
BELT	D	E	RL	SL	PART #	WEIGHT
18"	1.188"	27"	21.75"	30"	18-062-SLR	32 lbs.
24"	1.188"	33"	27.75"	36"	24-062-SLR	40 lbs.
30"	1.188"	39"	33.75"	42"	30-062-SLR	47 lbs.
36"	1.188"	45"	39.75"	48"	36-062-SLR	55 lbs.
42"	1.188"	51"	45.75"	54"	42-062-SLR	63 lbs.
48"	1.188"	57"	51.75"	60"	48-062-SLR	71 lbs.
54"	1.188"	63"	57.75"	66"	54-062-SLR	78 lbs.
60"	1.188"	69"	63.75"	72"	60-062-SLR	86 lbs.

RUBBER DISC RETURN — LIVE SHAFT

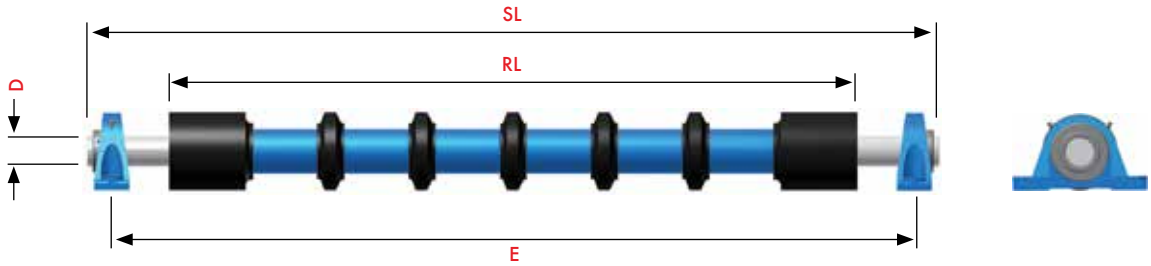

CEMA B 5-INCH DIAMETER

SPECS

BELT	D	E	RL	SL	PART #	WEIGHT
18″	1.188″	27″	21.75″	30″	18-052-DLR	27 lbs.
24″	1.188″	33″	27.75″	36″	24-052-DLR	32 lbs.
30″	1.188″	39″	33.75″	42″	30-052-DLR	38 lbs.
36″	1.188″	45″	39.75″	48″	36-052-DLR	43 lbs.
42″	1.188″	51″	45.75″	54″	42-052-DLR	49 lbs.
48″	1.188″	57″	51.75″	60″	48-052-DLR	54 lbs.
54″	1.188″	63″	57.75″	66″	54-052-DLR	60 lbs.
60″	1.188″	69″	63.75″	72″	60-052-DLR	65 lbs.
66″	1.188″	75″	69.25″	78″	66-052-DLR	71 lbs.
72″	1.188″	81″	75.25″	84″	72-052-DLR	76 lbs.

CEMA B 6-INCH DIAMETER

SPECS

BELT	D	E	RL	SL	PART #	WEIGHT
18″	1.188″	27″	21.75″	30″	18-062-DLR	29 lbs.
24″	1.188″	33″	27.75″	36″	24-062-DLR	35 lbs.
30″	1.188″	39″	33.75″	42″	30-062-DLR	42 lbs.
36″	1.188″	45″	39.75″	48″	36-062-DLR	46 lbs.
42″	1.188″	51″	45.75″	54″	42-062-DLR	53 lbs.
48″	1.188″	57″	51.75″	60″	48-062-DLR	59 lbs.
54″	1.188″	63″	57.75″	66″	54-062-DLR	66 lbs.
60″	1.188″	69″	63.75″	72″	60-062-DLR	71 lbs.
66″	1.188″	75″	69.25″	78″	66-062-DLR	78 lbs.
72″	1.188″	81″	75.25″	84″	72-062-DLR	83 lbs.

Bearings not included with Steel Return & Rubber Disc Return - Live Shaft

LOAD RATINGS FOR CEMA B IDLERS (lbs.)

	Trough Angle			
Belt Width (inches)	20°	35°	45°	Return
18	410	410	410	220
24	410	410	410	190
30	410	410	410	165
36	410	410	396	155

HD EQUAL ROLL STEEL

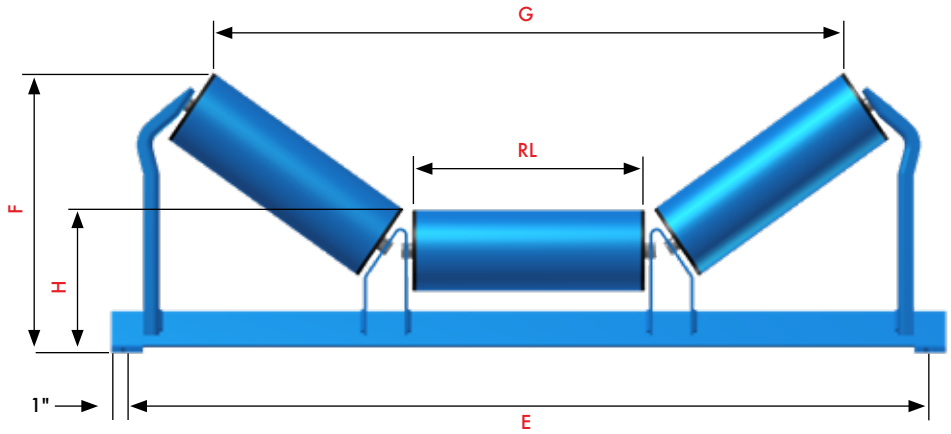

WIDE BASE FRAMES AVAILABLE
(E dimension) BELT + 15"

27.5° AVAILABLE

18" - 48" BELT

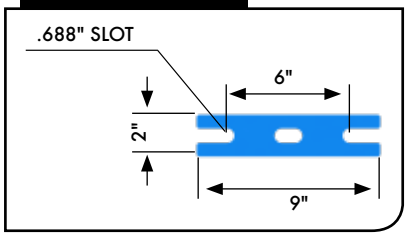

54" - 72" BELT

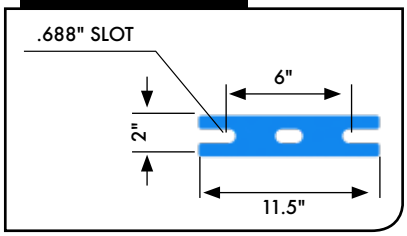

5-INCH DIAMETER

20° ANGLE

						CEMA C		CEMA D	
BELT	E	F	G	H	RL	PART #	WEIGHT	PART #	WEIGHT
18"	27"	11.125"	21.75"	8.688"	6.75"	18-253-HSE	40 lbs.	18-254-HSE	45 lbs.
24"	33"	11.9375"	27.5"	8.688"	8.75"	24-253-HSE	46 lbs.	24-254-HSE	53 lbs.
30"	39"	12.562"	33.25"	8.75"	10.75"	30-253-HSE	58 lbs.	30-254-HSE	66 lbs.
36"	45"	13.3125"	39"	8.75"	12.75"	36-253-HSE	64 lbs.	36-254-HSE	74 lbs.
42"	51"	14"	44.75"	8.75"	14.75"	42-253-HSE	77 lbs.	42-254-HSE	89 lbs.
48"	57"	14.688"	50.5"	8.75"	16.75"	48-253-HSE	85 lbs.	48-254-HSE	100 lbs.
54"	63"	15.688"	56.3125"	9.3125"	18.75"	54-253-HSE	118 lbs.	54-254-HSE	135 lbs.
60"	69"	16.188"	62.063"	9.3125"	20.75"	60-253-HSE	129 lbs.	60-254-HSE	150 lbs.
72"	81"	17.688"	73.5"	9.3125"	24.75"	72-253-HSE	152 lbs.	72-254-HSE	166 lbs.

35° ANGLE

						CEMA C		CEMA D	
BELT	E	F	G	H	RL	PART #	WEIGHT	PART #	WEIGHT
18"	27"	12.562"	18.875"	8.688"	6.75"	18-353-HSE	41 lbs.	18-354-HSE	46 lbs.
24"	33"	13.688"	24.125"	8.688"	8.75"	24-353-HSE	47 lbs.	24-354-HSE	55 lbs.
30"	39"	15"	29.375"	8.75"	10.75"	30-353-HSE	59 lbs.	30-354-HSE	67 lbs.
36"	45"	16.125"	34.688"	8.75"	12.75"	36-353-HSE	66 lbs.	36-354-HSE	77 lbs.
42"	51"	17.25"	39.9375"	8.75"	14.75"	42-353-HSE	78 lbs.	42-354-HSE	91 lbs.
48"	57"	18.562"	45.25"	8.75"	16.75"	48-353-HSE	87 lbs.	48-354-HSE	102 lbs.
54"	63"	20.125"	50.5"	9.3125"	18.75"	54-353-HSE	122 lbs.	54-354-HSE	139 lbs.
60"	69"	21.25"	55.75"	9.3125"	20.75"	60-353-HSE	132 lbs.	60-354-HSE	151 lbs.
72"	81"	23.4375"	66.562"	9.3125"	24.75"	72-353-HSE	155 lbs.	72-354-HSE	173 lbs.

45° ANGLE

						CEMA C		CEMA D	
BELT	E	F	G	H	RL	PART #	WEIGHT	PART #	WEIGHT
18"	27"	13.3125"	17"	8.688"	6.75"	18-453-HSE	42 lbs.	18-454-HSE	47 lbs.
24"	33"	14.75"	21.75"	8.688"	8.75"	24-453-HSE	48 lbs.	24-454-HSE	56 lbs.
30"	39"	16.375"	26.625"	8.75"	10.75"	30-453-HSE	60 lbs.	30-454-HSE	68 lbs.
36"	45"	17.75"	31.4375"	8.75"	12.75"	36-453-HSE	67 lbs.	36-454-HSE	78 lbs.
42"	51"	19.188"	36.25"	8.75"	14.75"	42-453-HSE	79 lbs.	42-454-HSE	92 lbs.
48"	57"	20.625"	41.125"	8.75"	16.75"	48-453-HSE	88 lbs.	48-454-HSE	103 lbs.
54"	63"	22.5"	45.9375"	9.3125"	18.75"	54-453-HSE	124 lbs.	54-454-HSE	141 lbs.
60"	69"	23.9375"	50.75"	9.3125"	20.75"	60-453-HSE	134 lbs.	60-454-HSE	152 lbs.
72"	81"	26.75"	55.562"	9.3125"	24.75"	72-453-HSE	159 lbs.	72-454-HSE	177 lbs.

HEAVYDUTY HD

Luff Industries Ltd. carries an extensive line of heavy duty CEMA idlers in the 3400 Series. 5" and 6" diameter rolls, along with standard belt widths ranging in size from 18"–72" are available.

Polymer End cap.

Luff utilizes a 25mm shaft, 6205 bearing on all CEMA C rollers and a 1 1/4" shaft, 6305 SKF ball bearing on CEMA D rollers.

All frames are jig welded for consistency and accuracy. Broached slots in the roller shaft lock the frame and roller together, forming a rigid assembly. The formed steel end plates are contoured to provide a clearance area preventing spilled material from wedging.

The end plates are provided with a locking mechanism: used with top fold conveyors, preventing the roller from becoming dislodged from the frame.

LOAD RATINGS FOR CEMA C IDLERS (lbs.)

	Trough Angle			
Belt Width (inches)	20°	35°	45°	Return
18	900	900	900	475
24	900	900	900	325
30	900	900	900	250
36	900	837	810	200
42	850	791	765	150
48	800	744	720	125
54	750	698	675	-
60	700	650	630	-

LOCKDOWNTAB

All Luff frames are equipped with a lock-down tab, located on the end plate and middle bracket.

Every Luff frame is jig welded to ensure consistent quality.

To lock roller into frame, simply move tab 1/4" over shaft to secure.

6-INCH DIAMETER

20° ANGLE

						CEMA C		CEMA D	
BELT	E	F	G	H	RL	PART #	WEIGHT	PART #	WEIGHT
18"	27"	11.562"	21.5"	9.188"	6.75"	18-263-HSE	46 lbs.	18-264-HSE	52 lbs.
24"	33"	12.125"	27.25"	9.188"	8.75"	24-263-HSE	53 lbs.	24-264-HSE	61 lbs.
30"	39"	12.9375"	33"	9.25"	10.75"	30-263-HSE	65 lbs.	30-264-HSE	75 lbs.
36"	45"	13.813"	38.75"	9.25"	12.75"	36-263-HSE	73 lbs.	36-264-HSE	85 lbs.
42"	51"	14.562"	44.5"	9.25"	14.75"	42-263-HSE	88 lbs.	42-264-HSE	101 lbs.
48"	57"	15.25"	50.25"	9.25"	16.75"	48-263-HSE	96 lbs.	48-264-HSE	113 lbs.
54"	63"	16.063"	56"	9.813"	18.75"	54-263-HSE	131 lbs.	54-264-HSE	150 lbs.
60"	69"	16.625"	61.75"	9.813"	20.75"	60-263-HSE	142 lbs.	60-264-HSE	163 lbs.
72"	81"	18"	73.125"	9.813"	24.75"	72-263-HSE	165 lbs.	72-264-HSE	186 lbs.

35° ANGLE

						CEMA C		CEMA D	
BELT	E	F	G	H	RL	PART #	WEIGHT	PART #	WEIGHT
18"	27"	12.75"	18.25"	9.188"	6.75"	18-363-HSE	47 lbs.	18-364-HSE	53 lbs.
24"	33"	14.125"	23.5"	9.188"	8.75"	24-363-HSE	54 lbs.	24-364-HSE	62 lbs.
30"	39"	15.3125"	28.813"	9.25"	10.75"	30-363-HSE	66 lbs.	30-364-HSE	76 lbs.
36"	45"	16.5"	34.125"	9.25"	12.75"	36-363-HSE	74 lbs.	36-364-HSE	86 lbs.
42"	51"	17.625"	39.375"	9.25"	14.75"	42-363-HSE	89 lbs.	42-364-HSE	102 lbs.
48"	57"	18.813"	44.625"	9.25"	16.75"	48-363-HSE	97 lbs.	48-364-HSE	114 lbs.
54"	63"	20.063"	49.9375"	9.813"	18.75"	54-363-HSE	134 lbs.	54-364-HSE	153 lbs.
60"	69"	21.25"	55.25"	9.813"	20.75"	60-363-HSE	145 lbs.	60-364-HSE	166 lbs.
72"	81"	23.625"	66"	9.813"	24.75"	72-363-HSE	169 lbs.	72-364-HSE	190 lbs.

45° ANGLE

						CEMA C		CEMA D	
BELT	E	F	G	H	RL	PART #	WEIGHT	PART #	WEIGHT
18"	27"	13.688"	15.9375"	9.188"	6.375"	18-463-HSE	48 lbs.	18-464-HSE	54 lbs.
24"	33"	15.125"	20.813"	9.188"	8.375"	24-463-HSE	55 lbs.	24-464-HSE	63 lbs.
30"	39"	16.688"	25.688"	9.25"	10.375"	30-463-HSE	67 lbs.	30-464-HSE	77 lbs.
36"	45"	18.125"	30.5"	9.25"	12.375"	36-463-HSE	76 lbs.	36-464-HSE	88 lbs.
42"	51"	19.562"	35.25"	9.25"	14.375"	42-463-HSE	90 lbs.	42-464-HSE	103 lbs.
48"	57"	20.9375"	40.25"	9.25"	16.375"	48-463-HSE	99 lbs.	48-464-HSE	116 lbs.
54"	63"	22.875"	45.125"	9.813"	18.375"	54-463-HSE	135 lbs.	54-464-HSE	154 lbs.
60"	69"	24.125"	50.875"	9.813"	20.375"	60-463-HSE	146 lbs.	60-464-HSE	167 lbs.
72"	81"	27.125"	55.75"	9.813"	24.75"	72-463-HSE	170 lbs.	72-464-HSE	192 lbs.

HD EQUAL ROLL IMPACT

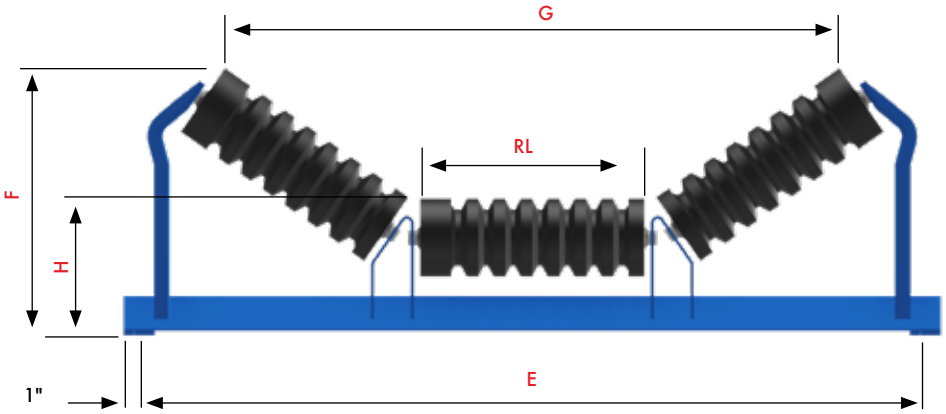

WIDE BASE FRAMES AVAILABLE
(E dimension) BELT + 15"

27.5° AVAILABLE

18" - 48" BELT

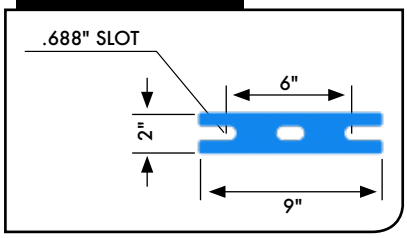

54" - 72" BELT

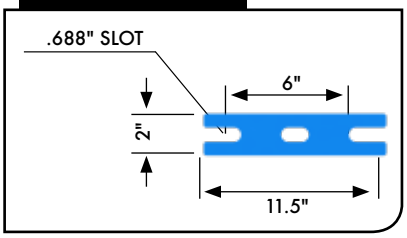

5-INCH DIAMETER

20° ANGLE

						CEMA C		CEMA D	
BELT	E	F	G	H	RL	PART #	WEIGHT	PART #	WEIGHT
18"	27"	11.063"	21.625"	8.688"	6.5"	18-253-HDE	50 lbs.	18-254-HDE	56 lbs.
24"	33"	11.688"	27.375"	8.688"	8.5"	24-253-HDE	58 lbs.	24-254-HDE	66 lbs.
30"	39"	12.688"	33.125"	8.75"	10.5"	30-253-HDE	76 lbs.	30-254-HDE	84 lbs.
36"	45"	13.3125"	38.875"	8.75"	12.5"	36-253-HDE	85 lbs.	36-254-HDE	94 lbs.
42"	51"	14"	44.625"	8.75"	14.5"	42-253-HDE	101 lbs.	42-254-HDE	112 lbs.
48"	57"	14.688"	50.375"	8.75"	16.5"	48-253-HDE	113 lbs.	48-254-HDE	125 lbs.
54"	63"	15.4375"	56.125"	9.3125"	18.5"	54-253-HDE	149 lbs.	54-254-HDE	162 lbs.
60"	69"	16.125"	61"	9.3125"	20.5"	60-253-HDE	163 lbs.	60-254-HDE	177 lbs.
72"	81"	17.5"	73.5"	9.3125"	24.5"	72-253-HDE	189 lbs.	72-254-HDE	197 lbs.

35° ANGLE

						CEMA C		CEMA D	
BELT	E	F	G	H	RL	PART #	WEIGHT	PART #	WEIGHT
18"	27"	12.562"	18.75"	8.688"	6.5"	18-353-HDE	51 lbs.	18-354-HDE	57 lbs.
24"	33"	13.688"	24"	8.688"	8.5"	24-353-HDE	59 lbs.	24-354-HDE	68 lbs.
30"	39"	15"	29.25"	8.75"	10.5"	30-353-HDE	77 lbs.	30-354-HDE	85 lbs
36"	45"	16"	34.5"	8.75"	12.5"	36-353-HDE	87 lbs.	36-354-HDE	96 lbs.
42"	51"	17.188"	39.75"	8.75"	14.5"	42-353-HDE	102 lbs.	42-354-HDE	114 lbs.
48"	57"	18.75"	45"	8.75"	16.5"	48-353-HDE	115 lbs.	48-354-HDE	127 lbs.
54"	63"	20.063"	50"	9.3125"	18.5"	54-353-HDE	152 lbs.	54-354-HDE	165 lbs.
60"	69"	21.25"	55.625"	9.3125"	20.5"	60-353-HDE	166 lbs.	60-354-HDE	179 lbs.
72"	81"	23.625"	66.562"	9.3125"	24.5"	72-353-HDE	192 lbs.	72-354-HDE	200 lbs.

45° ANGLE

						CEMA C		CEMA D	
BELT	E	F	G	H	RL	PART #	WEIGHT	PART #	WEIGHT
18"	27"	13.3125"	16.75"	8.688"	6.5"	18-453-HDE	52 lbs.	18-454-HDE	58 lbs.
24"	33"	14.688"	21.625"	8.688"	8.5"	24-453-HDE	62 lbs.	24-454-HDE	70 lbs.
30"	39"	16.3125"	26.5"	8.75"	10.5"	30-453-HDE	78 lbs.	30-454-HDE	86 lbs
36"	45"	17.688"	31.25"	8.75"	12.5"	36-453-HDE	88 lbs.	36-454-HDE	97 lbs.
42"	51"	19.063"	36"	8.75"	14.5"	42-453-HDE	103 lbs.	42-454-HDE	115 lbs.
48"	57"	20.5"	41.875"	8.75"	16.5"	48-453-HDE	116 lbs.	48-454-HDE	128 lbs.
54"	63"	22.5"	45.75"	9.3125"	18.5"	54-453-HDE	154 lbs.	54-454-HDE	166 lbs.
60"	69"	23.875"	50.625"	9.3125"	20.5"	60-453-HDE	168 lbs.	60-454-HDE	181 lbs.
72"	81"	26.688"	55.562"	9.3125"	24.5"	72-453-HDE	194 lbs.	72-454-HDE	205 lbs.

REINFORCEDSTEEL

Reinforced frame with round bar running the length of the angle iron and gussets on end plates, is standard for all Luff Industries' 3400 Series D-Impact frames.

This reinforcing can be applied to any series Luff frame, if required.

LOAD RATINGS FOR CEMA D IDLERS (lbs.)				
	Trough Angle			
Belt Width (inches)	20°	35°	45°	Return
24	1200	1200	1200	600
30	1200	1200	1200	600
36	1200	1200	1200	600
42	1200	1200	1200	500
48	1200	1200	1200	425
54	1200	1116	1080	375
60	1150	1070	1035	280
72	1050	977	945	155

SKF
SKF Equipped

QUICK REFERENCE

CEMA C	MEDIUM DUTY	UP TO 2,200 STPH	LUMPS UP TO 8"
CEMA D	MEDIUM/HEAVY DUTY	UP TO 3,000 STPH	LUMPS UP TO 10"

6-INCH DIAMETER

20° ANGLE

						CEMA C		CEMA D	
BELT	E	F	G	H	RL	PART #	WEIGHT	PART #	WEIGHT
18"	27"	11.562"	21.5"	9.188"	6.5"	18-263-HDE	54 lbs.	18-264-HDE	60 lbs.
24"	33"	12.813"	27"	9.188"	8.5"	24-263-HDE	65 lbs.	24-264-HDE	73 lbs.
30"	39"	13.563"	32.75"	9.25"	10.5"	30-263-HDE	84 lbs.	30-264-HDE	92 lbs.
36"	45"	14.25"	38.5"	9.25"	12.5"	36-263-HDE	95 lbs.	36-264-HDE	105 lbs.
42"	51"	14.9375"	44.25"	9.25"	14.5"	42-263-HDE	115 lbs.	42-264-HDE	125 lbs.
48"	57"	15.188"	50"	9.25"	16.5"	48-263-HDE	127 lbs.	48-264-HDE	140 lbs.
54"	63"	16.813"	55.75"	9.813"	18.5"	54-263-HDE	165 lbs.	54-264-HDE	179 lbs.
60"	69"	17.5"	61.5"	9.813"	20.5"	60-263-HDE	181 lbs.	60-264-HDE	195 lbs.
72"	81"	18.875"	73.125"	9.813"	24.5"	72-263-HDE	206 lbs.	72-264-HDE	217 lbs.

35° ANGLE

						CEMA C		CEMA D	
BELT	E	F	G	H	RL	PART #	WEIGHT	PART #	WEIGHT
18"	27"	12.9375"	18.125"	9.188"	6.5"	18-363-HDE	55 lbs.	18-364-HDE	61 lbs.
24"	33"	14.063"	23.375"	9.188"	8.5"	24-363-HDE	66 lbs.	24-364-HDE	74 lbs.
30"	39"	15.375"	28.625"	9.25"	10.5"	30-363-HDE	85 lbs.	30-364-HDE	93 lbs.
36"	45"	16.9375"	34"	9.25"	12.5"	36-363-HDE	97 lbs.	36-364-HDE	106 lbs.
42"	51"	17.688"	39.25"	9.25"	14.5"	42-363-HDE	116 lbs.	42-364-HDE	126 lbs.
48"	57"	19.25"	44.5"	9.25"	16.5"	48-363-HDE	128 lbs.	48-364-HDE	141 lbs.
54"	63"	20.9375"	49.75"	9.813"	18.5"	54-363-HDE	167 lbs.	54-364-HDE	182 lbs.
60"	69"	21.625"	55"	9.813"	20.5"	60-363-HDE	183 lbs.	60-364-HDE	198 lbs.
72"	81"	24.3125"	66"	9.813"	24.5"	72-363-HDE	208 lbs.	72-364-HDE	222 lbs.

45° ANGLE

						CEMA C		CEMA D	
BELT	E	F	G	H	RL	PART #	WEIGHT	PART #	WEIGHT
18"	27"	13.625"	15.9375"	9.188"	6.375"	18-463-HDE	56 lbs.	18-464-HDE	62 lbs.
24"	33"	15.063"	20.813"	9.188"	8.375"	24-463-HDE	67 lbs.	24-464-HDE	75 lbs.
30"	39"	16.625"	25.625"	9.25"	10.375"	30-363-HDE	85 lbs.	30-364-HDE	93 lbs.
36"	45"	18.063"	30.4375"	9.25"	12.375"	36-463-HDE	98 lbs.	36-464-HDE	108 lbs.
42"	51"	19.4375"	35.3125"	9.25"	14.375"	42-463-HDE	117 lbs.	42-464-HDE	127 lbs.
48"	57"	20.813"	40.125"	9.25"	16.375"	48-463-HDE	130 lbs.	48-464-HDE	142 lbs.
54"	63"	22.813"	44.9375"	9.813"	18.375"	54-463-HDE	168 lbs.	54-464-HDE	183 lbs.
60"	69"	24.25"	49.813"	9.813"	20.375"	60-463-HDE	184 lbs.	60-464-HDE	199 lbs.
72"	81"	27.063"	55.75"	9.813"	24.375"	72-463-HDE	210 lbs.	72-464-HDE	224 lbs.

HD OFFSET CENTER ROLL STEEL

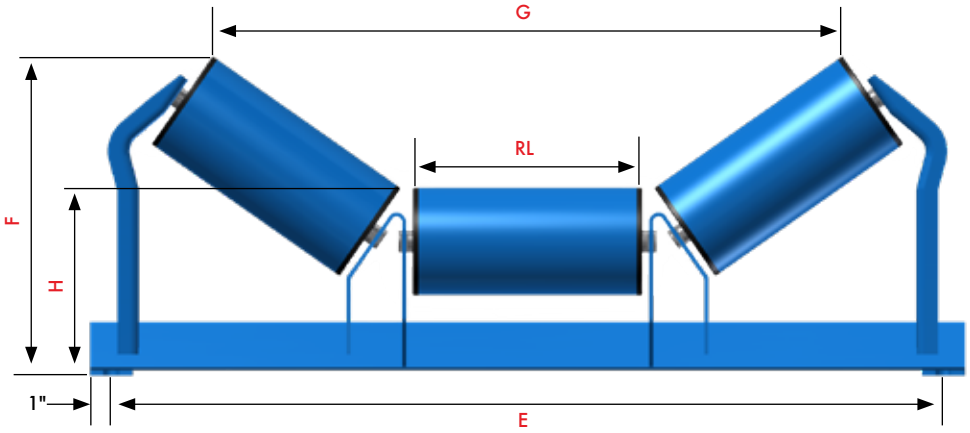

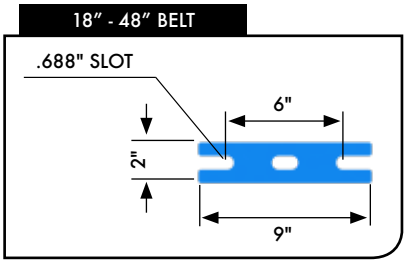

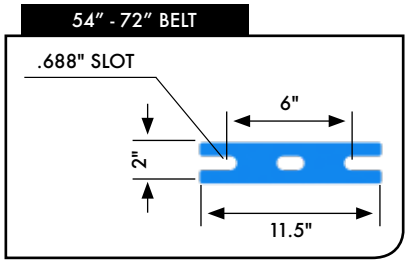

5-INCH DIAMETER

20° ANGLE

					CEMA C		CEMA D	
BELT	E	F	G	H	RL	PART #	WEIGHT	PART #	WEIGHT
18"	27"	11.125"	21.75"	8.688"	6.75"	18-253-HSEO	41 lbs.	18-254-HSEO	46 lbs.
24"	33"	11.9375"	27.5"	8.688"	8.75"	24-253-HSEO	47 lbs.	24-254-HSEO	54 lbs.
30"	39"	12.562"	33.25"	8.75"	10.75"	30-253-HSEO	59 lbs.	30-254-HSEO	67 lbs.
36"	45"	13.3125"	39"	8.75"	12.75"	36-253-HSEO	65 lbs.	36-254-HSEO	75 lbs.
42"	51"	14"	44.75"	8.75"	14.75"	42-253-HSEO	78 lbs.	42-254-HSEO	90 lbs.
48"	57"	14.688"	50.5"	8.75"	16.75"	48-253-HSEO	86 lbs.	48-254-HSEO	101 lbs.
54"	63"	15.688"	56.3125"	9.3125"	18.75"	54-253-HSEO	120 lbs.	54-254-HSEO	137 lbs.
60"	69"	16.188"	62.063"	9.3125"	20.75"	60-253-HSEO	130 lbs.	60-254-HSEO	149 lbs.
72"	81"	17.688"	71.5"	9.3125"	24.75"	72-253-HSEO	148 lbs.	72-254-HSEO	167 lbs.

35° ANGLE

					CEMA C		CEMA D	
BELT	E	F	G	H	RL	PART #	WEIGHT	PART #	WEIGHT
18"	27"	12.562"	18.875"	8.688"	6.75"	18-353-HSEO	43 lbs.	18-354-HSEO	48 lbs.
24"	33"	13.688"	24.125"	8.688"	8.75"	24-353-HSEO	49 lbs.	24-354-HSEO	56 lbs.
30"	39"	15"	29.375"	8.75"	10.75"	30-353-HSEO	61 lbs.	30-354-HSEO	69 lbs.
36"	45"	16.125"	34.688"	8.75"	12.75"	36-353-HSEO	67 lbs.	36-354-HSEO	78 lbs.
42"	51"	17.25"	39.9375"	8.75"	14.75"	42-353-HSEO	80 lbs.	42-354-HSEO	92 lbs.
48"	57"	18.562"	45.25"	8.75"	16.75"	48-353-HSEO	88 lbs.	48-354-HSEO	103 lbs.
54"	63"	20.125"	50.5"	9.3125"	18.75"	54-353-HSEO	123 lbs.	54-354-HSEO	140 lbs.
60"	69"	21.25"	55.75"	9.3125"	20.75"	60-353-HSEO	133 lbs.	60-354-HSEO	152 lbs.
72"	81"	23.4375"	65.5"	9.3125"	24.75"	72-353-HSEO	151 lbs.	72-354-HSEO	170 lbs.

45° ANGLE

					CEMA C		CEMA D	
BELT	E	F	G	H	RL	PART #	WEIGHT	PART #	WEIGHT
18"	27"	13.3125"	17"	8.688"	6.75"	18-453-HSEO	44 lbs.	18-454-HSEO	49 lbs.
24"	33"	14.75"	21.75"	8.688"	8.75"	24-453-HSEO	50 lbs.	24-454-HSEO	57 lbs.
30"	39"	16.375"	26.625"	8.75"	10.75"	30-453-HSEO	62 lbs.	30-454-HSEO	70 lbs.
36"	45"	17.75"	31.4375"	8.75"	12.75"	36-453-HSEO	69 lbs.	36-454-HSEO	79 lbs.
42"	51"	19.188"	36.25"	8.75"	14.75"	42-453-HSEO	81 lbs.	42-454-HSEO	93 lbs.
48"	57"	20.625"	41.125"	8.75"	16.75"	48-453-HSEO	90 lbs.	48-454-HSEO	105 lbs.
54"	63"	22.5"	45.9375"	9.3125"	18.75"	54-453-HSEO	125 lbs.	54-454-HSEO	142 lbs.
60"	69"	23.9375"	50.75"	9.3125"	20.75"	60-453-HSEO	135 lbs.	60-454-HSEO	154 lbs.
72"	81"	26.75"	60"	9.3125"	24.75"	72-453-HSEO	153 lbs.	72-454-HSEO	172 lbs.

OFFSET CENTER ROLL IMPACT

Also available

All CEMA D rated Offset Center Roll Impact frames feature Luff reinforcing.

6-INCH DIAMETER

20° ANGLE

						CEMA C		CEMA D	
BELT	E	F	G	H	RL	PART #	WEIGHT	PART #	WEIGHT
18″	27″	11.562″	21.5″	9.188″	6.75″	18-263-HSEO	47 lbs.	18-264-HSEO	53 lbs.
24″	33″	12.125″	27.25″	9.188″	8.75″	24-263-HSEO	54 lbs.	24-264-HSEO	62 lbs.
30″	39″	12.9375″	33″	9.25″	10.75″	30-263-HSEO	66 lbs.	30-264-HSEO	76 lbs.
36″	45″	13.813″	38.75″	9.25″	12.75″	36-263-HSEO	74 lbs.	36-264-HSEO	86 lbs.
42″	51″	14.562″	44.5″	9.25″	14.75″	42-263-HSEO	89 lbs.	42-264-HSEO	102 lbs.
48″	57″	15.25″	50.25″	9.25″	16.75″	48-263-HSEO	97 lbs.	48-264-HSEO	114 lbs.
54″	63″	16.063″	56″	9.813″	18.75″	54-263-HSEO	132 lbs.	54-264-HSEO	151 lbs.
60″	69″	16.625″	61.75″	9.813″	20.75″	60-263-HSEO	143 lbs.	60-264-HSEO	164 lbs.
72″	81″	18″	71.125″	9.813″	24.75″	72-263-HSEO	161 lbs.	72-264-HSEO	182 lbs.

35° ANGLE

						CEMA C		CEMA D	
BELT	E	F	G	H	RL	PART #	WEIGHT	PART #	WEIGHT
18″	27″	12.75″	18.25″	9.188″	6.75″	18-363-HSEO	49 lbs.	18-364-HSEO	55 lbs.
24″	33″	14.125″	23.5″	9.188″	8.75″	24-363-HSEO	56 lbs.	24-364-HSEO	64 lbs.
30″	39″	15.3125″	28.813″	9.25″	10.75″	30-363-HSEO	68 lbs.	30-364-HSEO	78 lbs.
36″	45″	16.5″	34.125″	9.25″	12.75″	36-363-HSEO	76 lbs.	36-364-HSEO	88 lbs.
42″	51″	17.625″	39.375″	9.25″	14.75″	42-363-HSEO	91 lbs.	42-364-HSEO	104 lbs.
48″	57″	18.813″	44.625″	9.25″	16.75″	48-363-HSEO	99 lbs.	48-364-HSEO	116 lbs.
54″	63″	20.063″	49.9375″	9.813″	18.75″	54-363-HSEO	135 lbs.	54-364-HSEO	154 lbs.
60″	69″	21.25″	55.25″	9.813″	20.75″	60-363-HSEO	146 lbs.	60-364-HSEO	167 lbs.
72″	81″	23.625″	64.9375″	9.813″	24.75″	72-363-HSEO	164 lbs.	72-364-HSEO	185 lbs.

45° ANGLE

						CEMA C		CEMA D	
BELT	E	F	G	H	RL	PART #	WEIGHT	PART #	WEIGHT
18″	27″	13.688″	15.9375″	9.188″	6.375″	18-463-HSEO	50 lbs.	18-464-HSEO	56 lbs.
24″	33″	15.125″	20.813″	9.188″	8.375″	24-463-HSEO	57 lbs.	24-464-HSEO	65 lbs.
30″	39″	16.688″	25.688″	9.25″	10.375″	30-463-HSEO	69 lbs.	30-464-HSEO	79 lbs.
36″	45″	18.125″	30.5″	9.25″	12.375″	36-463-HSEO	78 lbs.	36-464-HSEO	90 lbs.
42″	51″	19.562″	35.25″	9.25″	14.375″	42-463-HSEO	92 lbs.	42-464-HSEO	105 lbs.
48″	57″	20.9375″	40.25″	9.25″	16.375″	48-463-HSEO	100 lbs.	48-464-HSEO	118 lbs.
54″	63″	22.875″	45.125″	9.813″	18.375″	54-463-HSEO	136 lbs.	54-464-HSEO	156 lbs.
60″	69″	24.125″	50.875″	9.813″	20.375″	60-463-HSEO	148 lbs.	60-464-HSEO	169 lbs.
72″	81″	27.125″	59″	9.813″	24.75″	72-463-HSEO	166 lbs.	72-464-HSEO	187 lbs.

HD TROUGH TRAINING

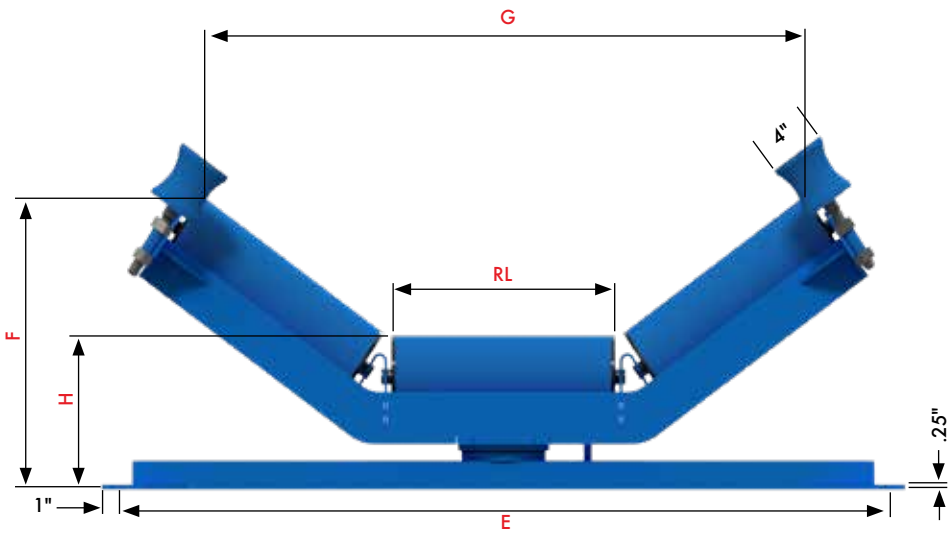

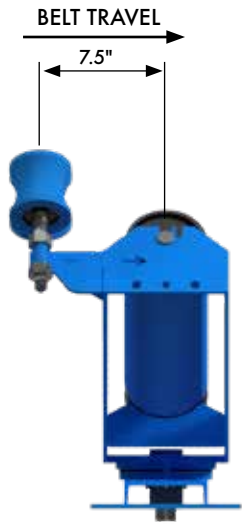

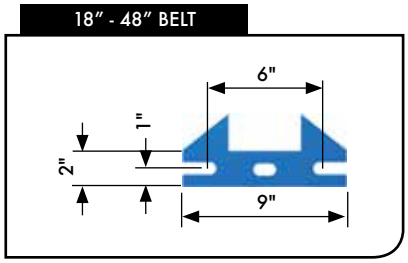

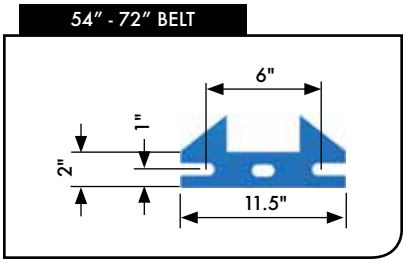

5-INCH DIAMETER

20° ANGLE

					CEMA C		CEMA D	
BELT	E	F	G	H	RL	PART #	WEIGHT	PART #	WEIGHT
18"	27"	11.813"	21.688"	9.25"	6.75"	18-253-HSTE-U	70 lbs.	18-254-HSTE-U	71 lbs.
24"	33"	12.5"	27.5"	9.25"	8.75"	24-253-HSTE-U	79 lbs.	24-254-HSTE-U	86 lbs.
30"	39"	13.188"	33.25"	9.25"	10.75"	30-253-HSTE-U	93 lbs.	30-254-HSTE-U	96 lbs.
36"	45"	13.813"	39"	9.25"	12.75"	36-253-HSTE-U	102 lbs.	36-254-HSTE-U	112 lbs.
42"	51"	14.625"	44.75"	9.375	14.75"	42-253-HSTE-U	116 lbs.	42-254-HSTE-U	129 lbs.
48"	57"	15.3125"	50.5"	9.375"	16.75"	48-253-HSTE-U	123 lbs.	48-254-HSTE-U	143 lbs.
54"	63"	16.375"	56.25"	9.813"	18.75"	54-253-HSTE-U	163 lbs.	54-254-HSTE-U	181 lbs.
60"	69"	17.063"	62"	9.813"	20.75"	60-253-HSTE-U	175 lbs.	60-254-HSTE-U	195 lbs.
72"	81"	18.5"	73.5"	9.813"	24.75"	72-253-HSTE-U	202 lbs.	72-254-HSTE-U	222 lbs.

35° ANGLE

					CEMA C		CEMA D	
BELT	E	F	G	H	RL	PART #	WEIGHT	PART #	WEIGHT
18"	27"	13.25"	19"	9.25"	6.75"	18-353-HSTE-U	71 lbs.	18-354-HSTE-U	72 lbs.
24"	33"	14.4325"	24.25"	9.25'	8.75"	24-353-HSTE-U	80 lbs.	24-354-HSTE-U	87 lbs.
30"	39"	15.563"	29.5"	9.25"	10.75"	30-353-HSTE-U	94 lbs.	30-354-HSTE-U	97 lbs.
36"	45"	16.75"	34.75"	9.25"	12.75"	36-353-HSTE-U	103 lbs.	36-354-HSTE-U	113 lbs.
42"	51"	17.9375"	40"	9.375	14.75"	42-353-HSTE-U	117 lbs.	42-354-HSTE-U	130 lbs.
48"	57"	19.063"	45.3125"	9.375"	16.75"	48-353-HSTE-U	124 lbs.	48-354-HSTE-U	144 lbs.
54"	63"	20.625"	50.5"	9.813"	18.75"	54-353-HSTE-U	164 lbs.	54-354-HSTE-U	182 lbs.
60"	69"	21.75"	55.75"	9.813"	20.75"	60-353-HSTE-U	177 lbs.	60-354-HSTE-U	196 lbs.
72"	81"	24.063"	66.4375"	9.813"	24.75"	72-353-HSTE-U	204 lbs.	72-354-HSTE-U	223 lbs.

45° ANGLE

					CEMA C		CEMA D	
BELT	E	F	G	H	RL	PART #	WEIGHT	PART #	WEIGHT
18"	27"	14.125"	17.75"	9.25"	6.75"	18-453-HSTE-U	73 lbs.	18-454-HSTE-U	74 lbs.
24"	33"	15.563"	21.75"	9.25'	8.75"	24-453-HSTE-U	82 lbs.	24-454-HSTE-U	89 lbs.
30"	39"	17"	27.375"	9.25"	10.75"	30-453-HSTE-U	96 lbs.	30-454-HSTE-U	99 lbs.
36"	45"	18.375"	31.375"	9.25"	12.75"	36-453-HSTE-U	105 lbs.	36-454-HSTE-U	115 lbs.
42"	51"	19.9375"	37"	9.375	14.75"	42-453-HSTE-U	119 lbs.	42-454-HSTE-U	132 lbs.
48"	57"	21.3125"	41.75"	9.375"	16.75"	48-453-HSTE-U	126 lbs.	48-454-HSTE-U	146 lbs.
54"	63"	23.188"	46.625"	9.813"	18.75"	54-453-HSTE-U	166 lbs.	54-454-HSTE-U	184 lbs.
60"	69"	24.625"	50.375"	9.813"	20.75"	60-453-HSTE-U	178 lbs.	60-454-HSTE-U	198 lbs.
72"	81"	27.4375"	61.063"	9.813"	24.75"	72-453-HSTE-U	205 lbs.	72-454-HSTE-U	225 lbs.

DEPENDABLE

Every Luff Guide Roller is designed to use two deep-groove ball bearings, snap rings and standard triple labyrinth seal to ensure strength and durability. Rollers come complete with training assembly, or can be purchased separately with weld- or bolt-on bracket. Call toll-free for more information: **1.888.349.LUFF (5833)**.

6-INCH DIAMETER

20° ANGLE

						CEMA C		CEMA D	
BELT	E	F	G	H	RL	PART #	WEIGHT	PART #	WEIGHT
18″	27″	12.25″	21.375″	9.75″	6.75″	18-263-HSTE-U	77 lbs.	18-264-HSTE-U	83 lbs.
24″	33″	12.9375″	27.125″	9.75″	8.75″	24-263-HSTE-U	86 lbs.	24-264-HSTE-U	94 lbs.
30″	39″	13.625″	32.875″	9.75″	10.75″	30-263-HSTE-U	101 lbs.	30-264-HSTE-U	110 lbs.
36″	45″	14.3125″	38.625″	9.75″	12.75″	36-263-HSTE-U	111 lbs.	36-264-HSTE-U	123 lbs.
42″	51″	15.063″	44.375″	9.875	14.75″	42-263-HSTE-U	127 lbs.	42-264-HSTE-U	140 lbs.
48″	57″	15.75″	50.125″	9.875″	16.75″	48-263-HSTE-U	138 lbs.	48-264-HSTE-U	155 lbs.
54″	63″	16.875″	55.875″	10.3125″	18.75″	54-263-HSTE-U	175 lbs.	54-264-HSTE-U	194 lbs.
60″	69″	17.563″	61.625″	10.3125″	20.75″	60-263-HSTE-U	188 lbs.	60-264-HSTE-U	213 lbs.
72″	81″	18.9375″	73.188″	10.3125″	24.75″	72-263-HSTE-U	215 lbs.	72-264-HSTE-U	237 lbs.

35° ANGLE

						CEMA C		CEMA D	
BELT	E	F	G	H	RL	PART #	WEIGHT	PART #	WEIGHT
18″	27″	13.688″	18.5″	9.75″	6.75″	18-363-HSTE-U	78 lbs.	18-364-HSTE-U	84 lbs.
24″	33″	14.813″	23.75″	9.75″	8.75″	24-363-HSTE-U	87 lbs.	24-364-HSTE-U	95 lbs.
30″	39″	15.9375″	29″	9.75″	10.75″	30-363-HSTE-U	102 lbs.	30-364-HSTE-U	111 lbs.
36″	45″	17.125″	34.25″	9.75″	12.75″	36-363-HSTE-U	112 lbs.	36-364-HSTE-U	124 lbs.
42″	51″	18.375″	39.5″	9.875	14.75″	42-363-HSTE-U	128 lbs.	42-364-HSTE-U	141 lbs.
48″	57″	19.5″	44.75″	9.875″	16.75″	48-363-HSTE-U	139 lbs.	48-364-HSTE-U	156 lbs.
54″	63″	21.063″	50″	10.3125″	18.75″	54-363-HSTE-U	176 lbs.	54-364-HSTE-U	195 lbs.
60″	69″	22.25″	55.25″	10.3125″	20.75″	60-363-HSTE-U	189 lbs.	60-364-HSTE-U	214 lbs.
72″	81″	24.5″	65.813″	10.3125″	24.75″	72-363-HSTE-U	216 lbs.	72-364-HSTE-U	238 lbs.

45° ANGLE

						CEMA C		CEMA D	
BELT	E	F	G	H	RL	PART #	WEIGHT	PART #	WEIGHT
18″	27″	14.5″	17	9.75″	6.375″	18-463-HSTE-U	80 lbs.	18-464-HSTE-U	86 lbs.
24″	33″	15.9375″	21.75″	9.75″	8.375″	24-463-HSTE-U	89 lbs.	24-464-HSTE-U	97 lbs.
30″	39″	17.3125″	26.625″	9.75″	10.375″	30-463-HSTE-U	104 lbs.	30-464-HSTE-U	113 lbs.
36″	45″	18.75″	31.375″	9.75″	12.375″	36-463-HSTE-U	114 lbs.	36-464-HSTE-U	126 lbs.
42″	51″	20.25″	36.25″	9.875	14.375″	42-463-HSTE-U	130 lbs.	42-464-HSTE-U	143 lbs.
48″	57″	21.688″	41″	9.875″	16.375″	48-463-HSTE-U	141 lbs.	48-464-HSTE-U	158 lbs.
54″	63″	23.563″	45.875″	10.3125″	18.375″	54-463-HSTE-U	178 lbs.	54-464-HSTE-U	197 lbs.
60″	69″	24.9375″	50.625″	10.3125″	20.375″	60-463-HSTE-U	191 lbs.	60-464-HSTE-U	217 lbs.
72″	81″	27.813″	60.3125″	10.3125″	24.375″	72-463-HSTE-U	218 lbs.	72-464-HSTE-U	240 lbs.

HD UNEQUAL ROLL STEEL

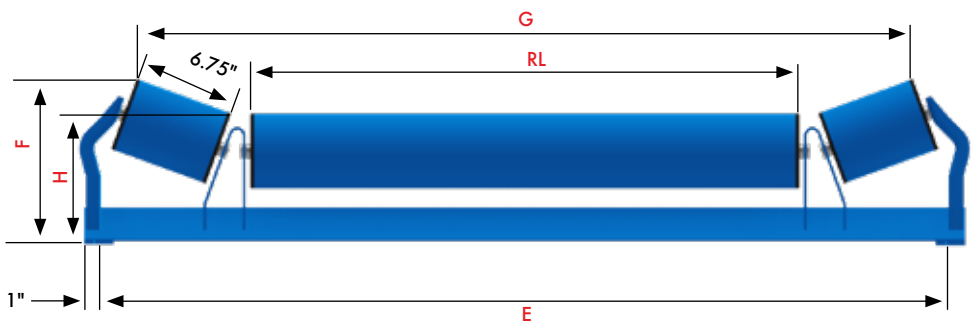

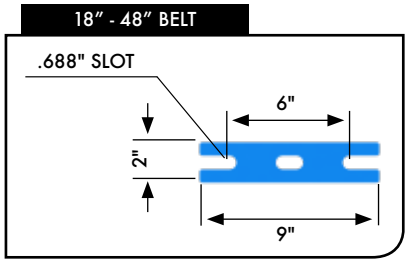

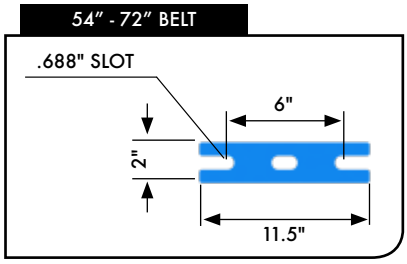

5-INCH DIAMETER

20° ANGLE

					CEMA C		CEMA D	
BELT	E	F	G	H	RL	PART #	WEIGHT	PART #	WEIGHT
24"	33"	10.9375"	27.75"	8.688"	12.75"	24-253-HSP	46 lbs.	24-254-HSP	53 lbs.
30"	39"	11"	33.75"	8.75"	18.75"	30-253-HSP	57 lbs.	30-254-HSP	66 lbs.
36"	45"	11"	39.75"	8.75"	24.75"	36-253-HSP	64 lbs.	36-254-HSP	76 lbs.
42"	51"	11.063"	45.75"	8.75"	30.75"	42-253-HSP	76 lbs.	42-254-HSP	90 lbs.
48"	57"	11.063"	51.75"	8.75"	36.75"	48-253-HSP	86 lbs.	48-254-HSP	99 lbs.
54"	63"	11.563"	57.75"	9.3125"	42.75"	-	-	54-254-HSP	132 lbs.
60"	69"	11.563"	63.75"	9.3125"	48.75"	-	-	60-254-HSP	147 lbs.
72"	81"	11.563"	75.75"	9.3125"	60.75"	-	-	72-254-HSP	170 lbs.

35° ANGLE

					CEMA C		CEMA D	
BELT	E	F	G	H	RL	PART #	WEIGHT	PART #	WEIGHT
24"	33"	12.5"	25.25"	8.688"	12.75"	24-353-HSP	47 lbs.	24-354-HSP	54 lbs.
30"	39"	12.562"	31.25"	8.75"	18.75"	30-353-HSP	58 lbs.	30-354-HSP	67 lbs.
36"	45"	12.562"	37.25"	8.75"	24.75"	36-353-HSP	65 lbs.	36-354-HSP	77 lbs.
42"	51"	12.625"	43.25"	8.75"	30.75"	42-353-HSP	77 lbs.	42-354-HSP	91 lbs.
48"	57"	12.625"	49.25"	8.75"	36.75"	48-353-HSP	87 lbs.	48-354-HSP	100 lbs.
54"	63"	13.125"	55.25"	9.3125"	42.75"	-	-	54-354-HSP	133 lbs.
60"	69"	13.125"	61.25"	9.3125"	48.75"	-	-	60-354-HSP	148 lbs.
72"	81"	13.125"	73.25"	9.3125"	60.75"	-	-	72-354-HSP	171 lbs.

6-INCH DIAMETER

20° ANGLE

					CEMA C		CEMA D	
BELT	E	F	G	H	RL	PART #	WEIGHT	PART #	WEIGHT
24"	33"	11.4375"	27.625"	9.188"	12.75"	24-263-HSP	53 lbs.	24-264-HSP	62 lbs.
30"	39"	11.5"	33.625"	9.25"	18.75"	30-263-HSP	65 lbs.	30-264-HSP	76 lbs.
36"	45"	11.5"	39.625"	9.25"	24.75"	36-263-HSP	73 lbs.	36-264-HSP	86 lbs.
42"	51"	11.562"	45.625"	9.25"	30.75"	42-263-HSP	86 lbs.	42-264-HSP	101 lbs.
48"	57"	11.562"	51.625"	9.25"	36.75"	48-263-HSP	97 lbs.	48-264-HSP	112 lbs.
54"	63"	12.063"	57.625"	9.813"	42.75"	-	-	54-264-HSP	148 lbs.
60"	69"	12.063"	63.625"	9.813"	48.75"	-	-	60-264-HSP	161 lbs.
72"	81"	12.063"	75.625"	9.813"	60.75"	-	-	72-264-HSP	184 lbs.

35° ANGLE

					CEMA C		CEMA D	
BELT	E	F	G	H	RL	PART #	WEIGHT	PART #	WEIGHT
24"	33"	12.9375"	24.375"	9.188"	12.75"	24-363-HSP	54 lbs.	24-364-HSP	63 lbs.
30"	39"	13"	30.375"	9.25"	18.75"	30-363-HSP	66 lbs.	30-364-HSP	77 lbs.
36"	45"	13"	36.375"	9.25"	24.75"	36-363-HSP	74 lbs.	36-364-HSP	87 lbs.
42"	51"	13.063?	42.375"	9.25"	30.75"	42-363-HSP	87 lbs.	42-364-HSP	102 lbs.
48"	57"	13.063"	48.375"	9.25"	36.75"	48-363-HSP	98 lbs.	48-364-HSP	113 lbs.
54"	63"	13.563"	54.375"	9.813"	42.75"	-	-	54-364-HSP	149 lbs.
60"	69"	13.563"	60.375"	9.813"	48.75"	-	-	60-364-HSP	162 lbs.
72"	81"	13.563"	72.375"	9.813"	60.75"	-	-	72-364-HSP	185 lbs.

HD UNEQUAL ROLL IMPACT

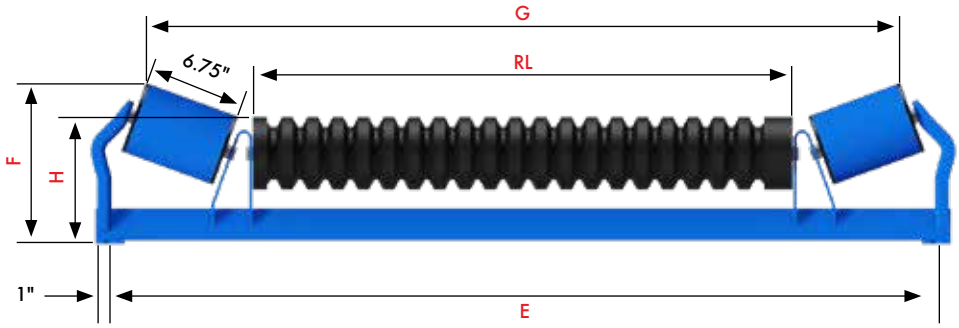

CAN BE SUPPLIED WITH ALL IMPACT ROLLS (HDP-AI)

18" - 48" BELT

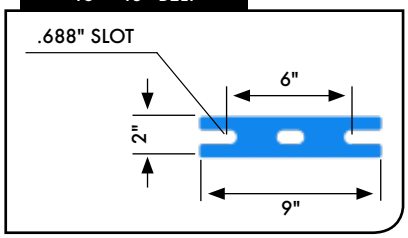

54" - 72" BELT

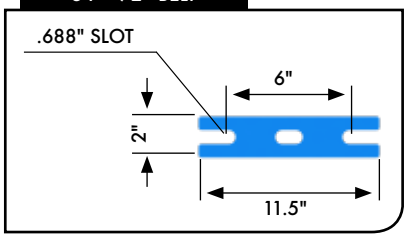

5-INCH DIAMETER

20° ANGLE

					CEMA C		CEMA D	
BELT	E	F	G	H	RL	PART #	WEIGHT	PART #	WEIGHT
24"	33"	10.9375"	27.75"	8.688"	12.5"	24-253-HDP	57 lbs.	24-254-HDP	62 lbs.
30"	39"	11"	33.75"	8.75"	18.5"	30-253-HDP	70 lbs.	30-254-HDP	77 lbs.
36"	45"	11"	39.75"	8.75"	24.5"	36-253-HDP	80 lbs.	36-254-HDP	88 lbs.
42"	51"	11.063"	45.75"	8.75"	30.5"	42-253-HDP	96 lbs.	42-254-HDP	105 lbs.
48"	57"	11.063"	51.75"	8.75"	36.5"	48-253-HDP	107 lbs.	48-254-HDP	117 lbs.
54"	63"	11.563"	57.75"	9.3125"	42.5"	-	-	54-254-HDP	154 lbs.
60"	69"	11.563"	63.75"	9.3125"	48.5"	-	-	60-254-HDP	168 lbs.
72"	81"	11.563"	75.75"	9.3125"	60.5"	-	-	72-254-HDP	190 lbs.

35° ANGLE

					CEMA C		CEMA D	
BELT	E	F	G	H	RL	PART #	WEIGHT	PART #	WEIGHT
24"	33"	12.5"	25.25"	8.688"	12.5"	24-353-HDP	58 lbs.	24-354-HDP	63 lbs.
30"	39"	12.562"	31.25"	8.75"	18.5"	30-353-HDP	71 lbs.	30-354-HDP	78 lbs.
36"	45"	12.562"	37.25"	8.75"	24.5"	36-353-HDP	81 lbs.	36-354-HDP	89 lbs.
42"	51"	12.625"	43.25"	8.75"	30.5"	42-353-HDP	97 lbs.	42-354-HDP	106 lbs.
48"	57"	12.625"	49.25"	8.75"	36.5"	48-353-HDP	108 lbs.	48-354-HDP	118 lbs.
54"	63"	13.125"	55.25"	9.3125"	42.5"	-	-	54-354-HDP	155 lbs.
60"	69"	13.125"	61.25"	9.3125"	48.5"	-	-	60-354-HDP	169 lbs.
72"	81"	13.125"	73.25"	9.3125"	60.5"	-	-	72-354-HDP	191 lbs.

6-INCH DIAMETER

20° ANGLE

					CEMA C		CEMA D	
BELT	E	F	G	H	RL	PART #	WEIGHT	PART #	WEIGHT
24"	33"	11.4375"	27.625"	9.188"	12.5"	24-263-HDP	64 lbs.	24-264-HDP	70 lbs.
30"	39"	11.5"	33.625"	9.25"	18.5"	30-263-HDP	80 lbs.	30-264-HDP	87 lbs.
36"	45"	11.5"	39.625"	9.25"	24.5"	36-263-HDP	91 lbs.	36-264-HDP	100 lbs.
42"	51"	11.562"	45.625"	9.25"	30.5"	42-263-HDP	109 lbs.	42-264-HDP	120 lbs.
48"	57"	11.562"	51.625"	9.25"	36.5"	48-263-HDP	122 lbs.	48-264-HDP	133 lbs.
54"	63"	12.063"	57.625"	9.813"	42.5"	-	-	54-264-HDP	172 lbs.
60"	69"	12.063"	63.625"	9.813"	48.5"	-	-	60-264-HDP	188 lbs.
72"	81"	12.063"	75.625"	9.813"	60.5"	-	-	72-264-HDP	201 lbs.

35° ANGLE

					CEMA C		CEMA D	
BELT	E	F	G	H	RL	PART #	WEIGHT	PART #	WEIGHT
24"	33"	12.9375"	24.375"	9.188"	12.5"	24-363-HDP	65 lbs.	24-364-HDP	71 lbs.
30"	39"	13"	30.375"	9.25"	18.5"	30-363-HDP	81 lbs.	30-364-HDP	88 lbs.
36"	45"	13"	36.375"	9.25"	24.5"	36-363-HDP	92 lbs.	36-364-HDP	101 lbs.
42"	51"	13.063?	42.375"	9.25"	30.5"	42-363-HDP	110 lbs.	42-364-HDP	121 lbs.
48"	57"	13.063"	48.375"	9.25"	36.5"	48-363-HDP	123 lbs.	48-364-HDP	134 lbs.
54"	63"	13.563"	54.375"	9.813"	42.5"	-	-	54-364-HDP	173 lbs.
60"	69"	13.563"	60.375"	9.813"	48.5"	-	-	60-364-HDP	189 lbs.
72"	81"	13.563"	72.375"	9.813"	60.5"	-	-	72-364-HDP	212 lbs.

HD FLAT CARRYING

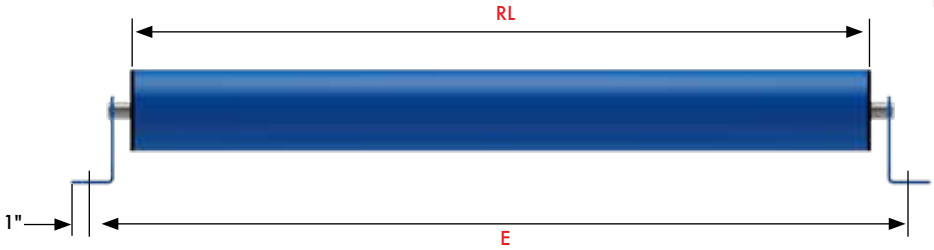

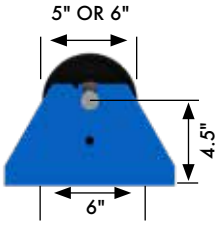

5-INCH DIAMETER

1.5" RISE BRACKETS AVAILABLE (HS-1.5)

SPECS			CEMA C		CEMA D	
BELT	E	RL	PART #	WEIGHT	PART #	WEIGHT
18"	27"	21.75"	18-053-HS	25 lbs.	18-054-HS	32 lbs.
24"	33"	27.75"	24-053-HS	29 lbs.	24-054-HS	39 lbs.
30"	39"	33.75"	30-053-HS	34 lbs.	30-054-HS	46 lbs.
36"	45"	39.75"	36-053-HS	38 lbs.	36-054-HS	52 lbs.
42"	51"	45.75"	42-053-HS	43 lbs.	42-054-HS	59 lbs.
48"	57"	51.75"	48-053-HS	47 lbs.	48-054-HS	66 lbs.
54"	63"	57.75"	-	-	54-054-HS	72 lbs.
60"	69"	63.75"	-	-	60-054-HS	79 lbs.
72"	81"	75.75"	-	-	72-054-HS	93 lbs.

6-INCH DIAMETER

SPECS			CEMA C		CEMA D	
BELT	E	RL	PART #	WEIGHT	PART #	WEIGHT
18"	27"	21.75"	18-063-HS	29 lbs.	18-064-HS	37 lbs.
24"	33"	27.75"	24-063-HS	35 lbs.	24-064-HS	44 lbs.
30"	39"	33.75"	30-063-HS	40 lbs.	30-064-HS	52 lbs.
36"	45"	39.75"	36-063-HS	46 lbs.	36-064-HS	60 lbs.
42"	51"	45.75"	42-063-HS	51 lbs.	42-064-HS	67 lbs.
48"	57"	51.75"	48-063-HS	57 lbs.	48-064-HS	75 lbs.
54"	63"	57.75"	-	-	54-064-HS	83 lbs.
60"	69"	63.75"	-	-	60-064-HS	91 lbs.
72"	81"	75.75"	-	-	72-064-HS	107 lbs.

HD FLAT IMPACT

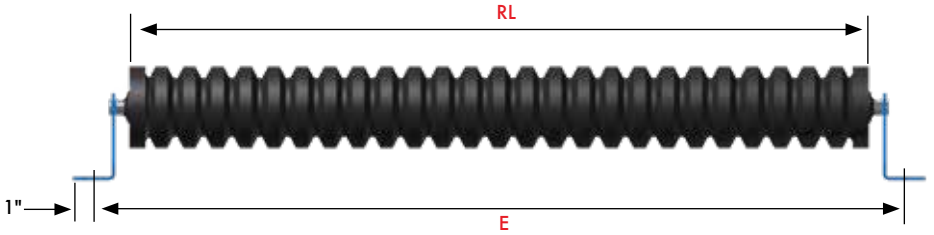

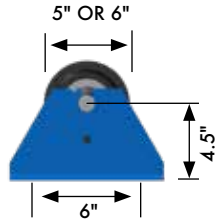

5-INCH DIAMETER

1.5" RISE BRACKETS AVAILABLE (HD-1.5)

SPECS			CEMA C		CEMA D	
BELT	E	RL	PART #	WEIGHT	PART #	WEIGHT
18"	27"	21.5"	18-053-HD	32 lbs.	18-054-HD	36 lbs.
24"	33"	27.5"	24-053-HD	39 lbs.	24-054-HD	44 lbs.
30"	39"	33.5"	30-053-HD	46 lbs.	30-054-HD	52 lbs.
36"	45"	39.5"	36-053-HD	53 lbs.	36-054-HD	61 lbs.
42"	51"	45.5"	42-053-HD	60 lbs.	42-054-HD	68 lbs.
48"	57"	51.5"	48-053-HD	67 lbs.	48-054-HD	77 lbs.
54"	63"	57.5"	-	-	54-054-HD	84 lbs.
60"	69"	63.5"	-	-	60-054-HD	94 lbs.
72"	81"	75.5"	-	-	72-054-HD	110 lbs.

6-INCH DIAMETER

SPECS			CEMA C		CEMA D	
BELT	E	RL	PART #	WEIGHT	PART #	WEIGHT
18"	27"	21.5"	18-063-HD	38 lbs.	18-064-HD	43 lbs.
24"	33"	27.5"	24-063-HD	47 lbs.	24-064-HD	52 lbs.
30"	39"	33.5"	30-063-HD	56 lbs.	30-064-HD	62 lbs.
36"	45"	39.5"	36-063-HD	66 lbs.	36-064-HD	73 lbs.
42"	51"	45.5"	42-063-HD	74 lbs.	42-064-HD	82 lbs.
48"	57"	51.5"	48-063-HD	83 lbs.	48-064-HD	93 lbs.
54"	63"	57.5"	-	-	54-064-HD	102 lbs.
60"	69"	63.5"	-	-	60-064-HD	112 lbs.
72"	81"	75.5"	-	-	72-064-HD	130 lbs.

HD STEEL RETURN ROLL

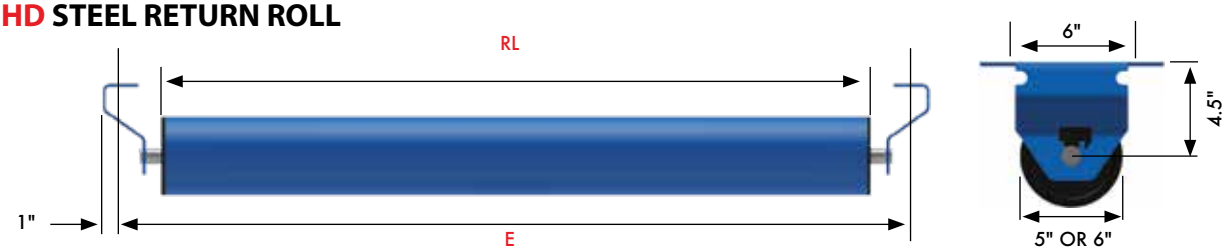

5-INCH DIAMETER

SPECS

			CEMA C		CEMA D	
BELT	E	RL	PART #	WEIGHT	PART #	WEIGHT
18″	27″	21.75″	18-053-OSR	25 lbs.	18-054-OSR	32 lbs.
24″	33″	27.75″	24-053-OSR	29 lbs.	24-054-OSR	39 lbs.
30″	39″	33.75″	30-053-OSR	34 lbs.	30-054-OSR	46 lbs.
36″	45″	39.75″	36-053-OSR	38 lbs.	36-054-OSR	52 lbs.
42″	51″	45.75″	42-053-OSR	43 lbs.	42-054-OSR	59 lbs.
48″	57″	51.75″	48-053-OSR	47 lbs.	48-054-OSR	66 lbs.
54″	63″	57.75″	-	-	54-054-OSR	72 lbs.
60″	69″	63.75″	-	-	60-054-OSR	79 lbs.
72″	81″	75.75″	-	-	72-054-OSR	93 lbs.

6-INCH DIAMETER

SPECS

			CEMA C		CEMA D	
BELT	E	RL	PART #	WEIGHT	PART #	WEIGHT
18″	27″	21.75″	18-063-OSR	29 lbs.	18-064-OSR	37 lbs.
24″	33″	27.75″	24-063-OSR	35 lbs.	24-064-OSR	44 lbs.
30″	39″	33.75″	30-063-OSR	40 lbs.	30-064-OSR	52 lbs.
36″	45″	39.75″	36-063-OSR	46 lbs.	36-064-OSR	60 lbs.
42″	51″	45.75″	42-063-OSR	51 lbs.	42-064-OSR	67 lbs.
48″	57″	51.75″	48-063-OSR	57 lbs.	48-064-OSR	75 lbs.
54″	63″	57.75″	-	-	54-064-OSR	83 lbs.
60″	69″	63.75″	-	-	60-064-OSR	91 lbs.
72″	81″	75.75″	-	-	72-064-OSR	107 lbs.

HD RUBBER DISC RETURN

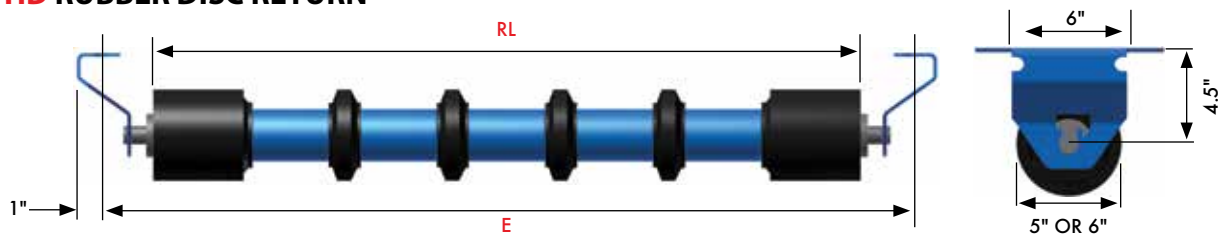

5-INCH DIAMETER

SPECS

			CEMA C		CEMA D	
BELT	E	RL	PART #	WEIGHT	PART #	WEIGHT
18″	27″	21.25″	18-053-ODR	28 lbs.	18-054-ODR	33 lbs.
24″	33″	27.25″	24-053-ODR	33 lbs.	24-054-ODR	40 lbs.
30″	39″	33.25″	30-053-ODR	38 lbs.	30-054-ODR	47 lbs.
36″	45″	39.25″	36-053-ODR	43 lbs.	36-054-ODR	53 lbs.
42″	51″	45.25″	42-053-ODR	48 lbs.	42-054-ODR	60 lbs.
48″	57″	51.25″	48-053-ODR	53 lbs.	48-054-ODR	67 lbs.
54″	63″	57.25″	-	-	54-054-ODR	73 lbs.
60″	69″	63.25″	-	-	60-054-ODR	80 lbs.
72″	81″	75.25″	-	-	72-054-ODR	94 lbs.

6-INCH DIAMETER

SPECS

			CEMA C		CEMA D	
BELT	E	RL	PART #	WEIGHT	PART #	WEIGHT
18″	27″	21.25″	18-063-ODR	32 lbs.	18-064-ODR	37 lbs.
24″	33″	27.25″	24-063-ODR	37 lbs.	24-064-ODR	44 lbs.
30″	39″	33.25″	30-063-ODR	43 lbs.	30-064-ODR	52 lbs.
36″	45″	39.25″	36-063-ODR	49 lbs.	36-064-ODR	59 lbs.
42″	51″	45.25″	42-063-ODR	54 lbs.	42-064-ODR	66 lbs.
48″	57″	51.25″	48-063-ODR	60 lbs.	48-064-ODR	73 lbs.
54″	63″	57.25″	-	-	54-064-ODR	80 lbs.
60″	69″	63.25″	-	-	60-064-ODR	88 lbs.
72″	81″	75.25″	-	-	72-064-ODR	104 lbs.

HD STEEL V-RETURN

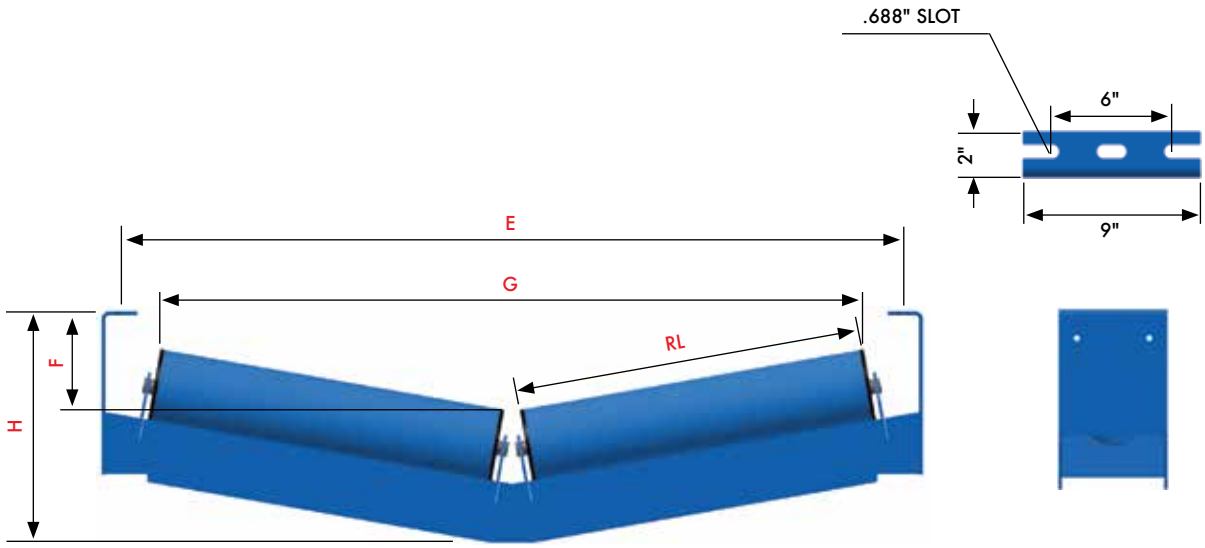

INVERTED V-DESIGN OR 15° AVAILABLE (IHSR)

5-INCH DIAMETER

10° ANGLE

						CEMA C		CEMA D	
BELT	E	F	G	H	RL	PART #	WEIGHT	PART #	WEIGHT
18″	27″	4″	22.321″	12.625″	10.75″	18-153-HSR	57 lbs.	18-154-HSR	61 lbs.
24″	33″	4.625″	28.188″	13.188″	13.75″	24-153-HSR	62 lbs.	24-154-HSR	69 lbs.
30″	39″	5.188″	34.063″	13.688″	16.75″	30-153-HSR	73 lbs.	30-154-HSR	83 lbs.
36″	45″	5.625″	39.9375″	14.188″	19.75″	36-153-HSR	80 lbs.	36-154-HSR	92 lbs.
42″	51″	6.188″	45.813″	14.75″	22.75″	42-153-HSR	93 lbs.	42-154-HSR	107 lbs.
48″	57″	6.75″	51.625″	15.25″	25.75″	48-153-HSR	99 lbs.	48-154-HSR	117 lbs.
54″	63″	7.25″	57.688″	15.75″	28.75″	54-153-HSR	113 lbs.	54-154-HSR	132 lbs.
60″	69″	7.75″	63.562″	16.25″	31.75″	60-153-HSR	181 lbs.	60-154-HSR	143 lbs.
72″	81″	8.875″	75.4375″	17.25″	34.75″	72-153-HSR	142 lbs.	72-154-HSR	164 lbs.

6-INCH DIAMETER

10° ANGLE

						CEMA C		CEMA D	
BELT	E	F	G	H	RL	PART #	WEIGHT	PART #	WEIGHT
18″	27″	3.5″	21.183″	12.625″	10.75″	18-163-HSR	61 lbs.	18-164-HSR	68 lbs.
24″	33″	4″	27.75″	13.188″	13.75″	24-163-HSR	69 lbs.	24-164-HSR	77 lbs.
30″	39″	4.5″	33.688″	13.688″	16.75″	30-163-HSR	80 lbs.	30-164-HSR	92 lbs.
36″	45″	5.063″	39.562″	14.188″	19.75″	36-163-HSR	88 lbs.	36-164-HSR	100 lbs.
42″	51″	5.625″	45.5″	14.75″	22.75″	42-163-HSR	101 lbs.	42-164-HSR	117 lbs.
48″	57″	6.125″	51.063″	15.25″	25.75″	48-163-HSR	110 lbs.	48-164-HSR	128 lbs.
54″	63″	6.625″	57″	15.75″	28.75″	54-163-HSR	125 lbs.	54-164-HSR	145 lbs.
60″	69″	7.125″	62.875″	16.25″	31.75″	60-163-HSR	134 lbs.	60-164-HSR	150 lbs.
72″	81″	8.125″	66.562″	17.25″	34.75″	72-163-HSR	156 lbs.	72-164-HSR	178 lbs.

HEAVYDUTY HD

HD DISC V-RETURN

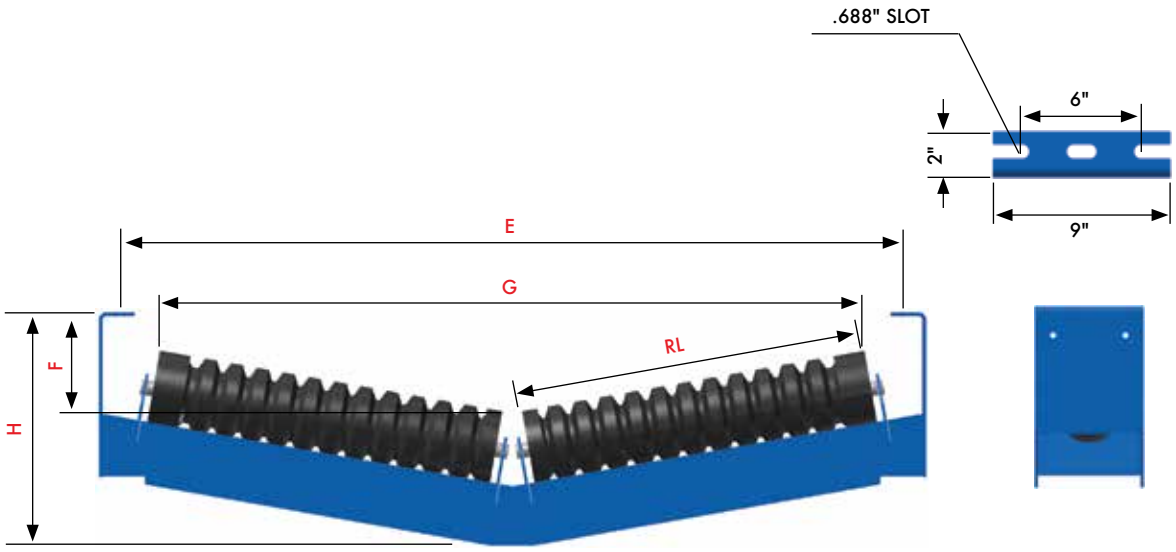

INVERTED V-DESIGN OR 15° AVAILABLE (IHDR)

5-INCH DIAMETER

10° ANGLE

						CEMA C		CEMA D	
BELT	E	F	G	H	RL	PART #	WEIGHT	PART #	WEIGHT
18″	27″	4.25″	21.875″	12.625″	10.5″	18-153-HDR	63 lbs.	18-154-HDR	66 lbs.
24″	33″	4.5″	28″	13.188″	13.5″	24-153-HDR	72 lbs.	24-154-HDR	75 lbs.
30″	39″	5.125″	33.625″	13.688″	16.5″	30-153-HDR	84 lbs.	30-154-HDR	90 lbs.
36″	45″	5.875″	40.25″	14.188″	19.5″	36-153-HDR	94 lbs.	36-154-HDR	101 lbs.
42″	51″	6.375″	45.625″	14.75″	22.5″	42-153-HDR	109 lbs.	42-154-HDR	116 lbs.
48″	57″	6.625″	51.562″	15.25″	25.5″	48-153-HDR	118 lbs.	48-154-HDR	127 lbs.
54″	63″	6.9375″	57.562″	15.75″	28.5″	54-153-HDR	134 lbs.	54-154-HDR	144 lbs.
60″	69″	7.4375″	63.562″	16.25″	31.5″	60-153-HDR	145 lbs.	60-154-HDR	156 lbs.
72″	81″	8.562″	75.562″	17.25″	34.5″	72-153-HDR	167 lbs.	72-154-HDR	178 lbs.

6-INCH DIAMETER

10° ANGLE

						CEMA C		CEMA D	
BELT	E	F	G	H	RL	PART #	WEIGHT	PART #	WEIGHT
18″	27″	3.5″	21.688″	12.625″	10.5″	18-163-HDR	69 lbs.	18-164-HDR	71 lbs.
24″	33″	4″	27.5″	13.188″	13.5″	24-163-HDR	79 lbs.	24-164-HDR	82 lbs.
30″	39″	4.5″	33.4375″	13.688″	16.5″	30-163-HDR	94 lbs.	30-164-HDR	99 lbs.
36″	45″	5.063″	39.3125″	14.188″	19.5″	36-163-HDR	100 lbs.	36-164-HDR	112 lbs.
42″	51″	5.625″	45.25″	14.75″	22.5″	42-163-HDR	122 lbs.	42-164-HDR	130 lbs.
48″	57″	6.125″	51.813″	15.25″	25.5″	48-163-HDR	132 lbs.	48-164-HDR	142 lbs.
54″	63″	6.625″	56.75″	15.75″	28.5″	54-163-HDR	151 lbs.	54-164-HDR	161 lbs.
60″	69″	7.125″	62.625″	16.25″	31.5″	60-163-HDR	164 lbs.	60-164-HDR	175 lbs.
72″	81″	8.125″	66.3125″	17.25″	34.5″	72-163-HDR	186 lbs.	72-164-HDR	198 lbs.

QUICK REFERENCE

CEMA B	LIGHT DUTY	UP TO 800 STPH (LOW TONNAGE)	SMALL LUMP SIZE
CEMA C	MEDIUM DUTY	UP TO 2,200 STPH	LUMPS UP TO 8"
CEMA D	MEDIUM/HEAVY DUTY	UP TO 3,000 STPH	LUMPS UP TO 10"
CEMA E	HEAVY DUTY	UP TO 6,000 STPH	LUMPS UP TO 12"

HD STEEL RETURN TRAINING

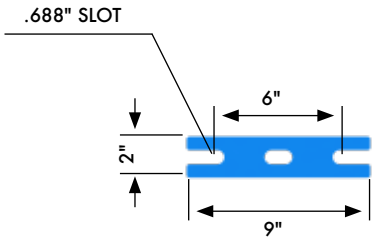

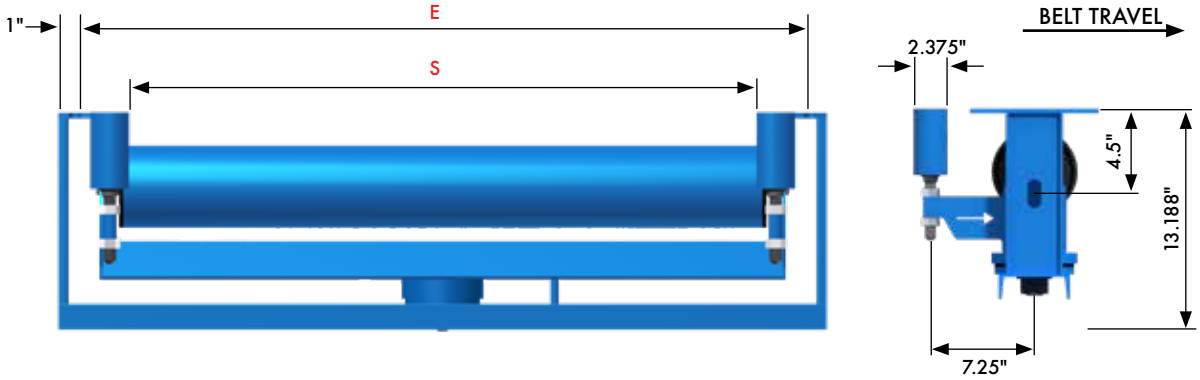

1.5″ DROP FRAME AVAILABLE (HSRT-1.5)

5-INCH DIAMETER

SPECS

			CEMA C		CEMA D	
BELT	E	S	PART #	WEIGHT	PART #	WEIGHT
18″	27″	20.3125″	18-053-HSRT	69 lbs.	18-054-HSRT	76 lbs.
24″	33″	26.3125″	24-053-HSRT	77 lbs.	24-054-HSRT	87 lbs.
30″	39″	32.3125″	30-053-HSRT	90 lbs.	30-054-HSRT	102 lbs.
36″	45″	38.3125″	36-053-HSRT	99 lbs.	36-054-HSRT	113 lbs.
42″	51″	44.3125″	42-053-HSRT	114 lbs.	42-054-HSRT	130 lbs.
48″	57″	50.3125″	48-053-HSRT	124 lbs.	48-054-HSRT	145 lbs.
54″	63″	56.3125″	-	-	54-054-HSRT	160 lbs.
60″	69″	62.3125″	-	-	60-054-HSRT	173 lbs.
72″	81″	74.3125″	-	-	72-054-HSRT	203 lbs.

6-INCH DIAMETER

SPECS

			CEMA C		CEMA D	
BELT	E	S	PART #	WEIGHT	PART #	WEIGHT
18″	27″	20.3125″	18-063-HSRT	73 lbs.	18-064-HSRT	81 lbs.
24″	33″	26.3125″	24-063-HSRT	83 lbs.	24-064-HSRT	92 lbs.
30″	39″	32.3125″	30-063-HSRT	96 lbs.	30-064-HSRT	108 lbs.
36″	45″	38.3125″	36-063-HSRT	107 lbs.	36-064-HSRT	121 lbs.
42″	51″	44.3125″	42-063-HSRT	122 lbs.	42-064-HSRT	138 lbs.
48″	57″	50.3125″	48-063-HSRT	134 lbs.	48-064-HSRT	152 lbs.
54″	63″	56.3125″	-	-	54-064-HSRT	171 lbs.
60″	69″	62.3125″	-	-	60-064-HSRT	185 lbs.
72″	81″	74.3125″	-	-	72-064-HSRT	215 lbs.

HD DISC RETURN TRAINING

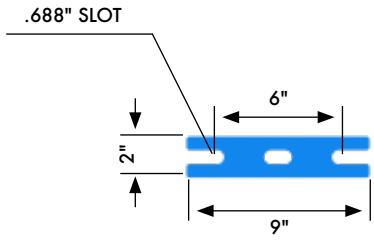

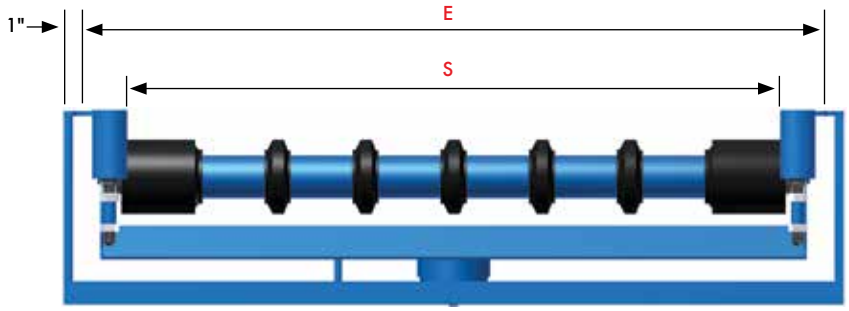

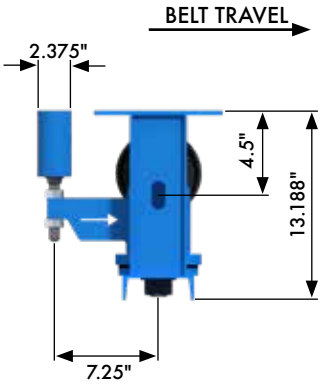

1.5" DROP FRAME AVAILABLE (HDRT-1.5)

5-INCH DIAMETER

SPECS

			CEMA C		CEMA D	
BELT	E	S	PART #	WEIGHT	PART #	WEIGHT
18"	27"	20.3125"	18-053-HDRT	72 lbs.	18-054-HDRT	77 lbs.
24"	33"	26.3125"	24-053-HDRT	81 lbs.	24-054-HDRT	88 lbs.
30"	39"	32.3125"	30-053-HDRT	94 lbs.	30-054-HDRT	103 lbs.
36"	45"	38.3125"	36-053-HDRT	104 lbs.	36-054-HDRT	114 lbs.
42"	51"	44.3125"	42-053-HDRT	119 lbs.	42-054-HDRT	131 lbs.
48"	57"	50.3125"	48-053-HDRT	130 lbs.	48-054-HDRT	146 lbs.
54"	63"	56.3125"	-	-	54-054-HDRT	161 lbs.
60"	69"	62.3125"	-	-	60-054-HDRT	174 lbs.
72"	81"	74.3125"	-	-	72-054-HDRT	205 lbs.

6-INCH DIAMETER

SPECS

			CEMA C		CEMA D	
BELT	E	S	PART #	WEIGHT	PART #	WEIGHT
18"	27"	20.3125"	18-063-HDRT	76 lbs.	18-064-HDRT	82 lbs.
24"	33"	26.3125"	24-063-HDRT	85 lbs.	24-064-HDRT	93 lbs.
30"	39"	32.3125"	30-063-HDRT	99 lbs.	30-064-HDRT	109 lbs.
36"	45"	38.3125"	36-063-HDRT	110 lbs.	36-064-HDRT	122 lbs.
42"	51"	44.3125"	42-063-HDRT	125 lbs.	42-064-HDRT	139 lbs.
48"	57"	50.3125"	48-063-HDRT	137 lbs.	48-064-HDRT	153 lbs.
54"	63"	56.3125"	-	-	54-064-HDRT	172 lbs.
60"	69"	62.3125"	-	-	60-064-HDRT	186 lbs.
72"	81"	74.3125"	-	-	72-064-HDRT	216 lbs.

QUALITYSERVICE DEPENDABILITY

QSD

Attention to detail is an important factor to Luff's product line. Every component Luff Industries manufactures is made to the highest quality available.

HD FLAT IMPACT LIVE SHAFT

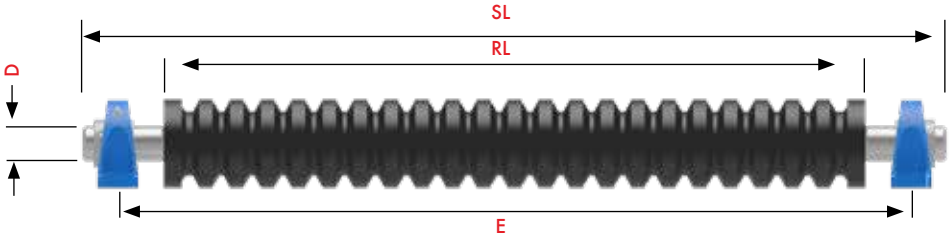

5 OR 6-INCH DIAMETER

SPECS

					CEMA C (5″)		CEMA C (6″)	
BELT	D	E	RL	SL	PART #	WEIGHT	PART #	WEIGHT
18″	1.9375″	27″	21.5″	31″	18C-500-DL	46 lbs.	18C-600-DL	49 lbs.
24″	1.9375″	33″	27.5″	36″	24C-500-DL	57 lbs.	24C-600-DL	59 lbs.
30″	1.9375″	39″	33.5″	43″	30C-500-DL	68 lbs.	30C-600-DL	71 lbs.
36″	2.188″	45″	39.5″	49″	36C-500-DL	79 lbs.	36C-600-DL	84 lbs.
42″	2.188″	51″	45.5″	55″	42C-500-DL	90 lbs.	42C-600-DL	95 lbs.
48″	2.188″	57″	51.5″	61″	48C-500-DL	99 lbs.	48C-600-DL	106 lbs.

5 OR 6-INCH DIAMETER

SPECS

					CEMA D (5″)		CEMA D (6″)	
BELT	D	E	RL	SL	PART #	WEIGHT	PART #	WEIGHT
18″	1.9375″	27″	21.5″	31″	18-054-HDL	56 lbs.	18-064-HDL	67 lbs.
24″	1.9375″	33″	27.5″	36″	24-054-HDL	70 lbs.	24-064-HDL	82 lbs.
30″	1.9375″	39″	33.5″	43″	30-054-HDL	83 lbs.	30-064-HDL	100 lbs.
36″	2.188″	45″	39.5″	49″	36-054-HDL	99 lbs.	36-064-HDL	117 lbs.
42″	2.188″	51″	45.5″	55″	42-054-HDL	113 lbs.	42-064-HDL	133 lbs.
48″	2.188″	57″	51.5″	61″	48-054-HDL	126 lbs.	48-064-HDL	150 lbs.
54″	2.188″	63″	57.5″	67″	54-054-HDL	139 lbs.	54-064-HDL	165 lbs.
60″	2.188″	69″	63.5″	73″	60-054-HDL	153 lbs.	60-064-HDL	181 lbs.
72″	2.188″	81″	75.5″	85″	72-054-HDL	180 lbs.	72-064-HDL	211 lbs.

HD STEEL RETURN — LIVE SHAFT

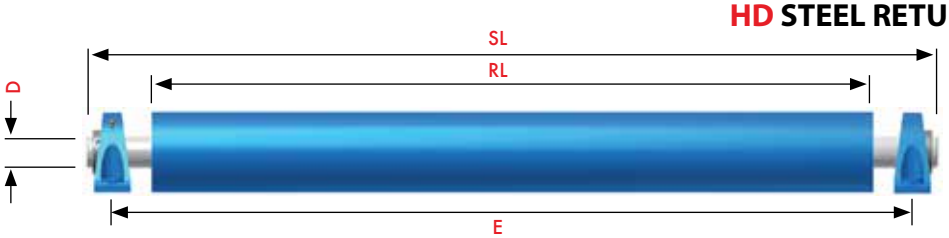

5 OR 6-INCH DIAMETER

SPECS

					CEMA D (5″)		CEMA D (6″)	
BELT	D	E	RL	SL	PART #	WEIGHT	PART #	WEIGHT
24″	1.9375″	33″	27.75″	38″	24-054-SLR	53 lbs.	24-064-SLR	62 lbs.
30″	1.9375″	39″	33.75″	44″	30-054-SLR	64 lbs.	30-064-SLR	73 lbs.
36″	1.9375″	45″	39.75″	50″	36-054-SLR	74 lbs.	36-064-SLR	83 lbs.
42″	1.9375″	51″	45.75″	56″	42-054-SLR	84 lbs.	42-064-SLR	94 lbs.
48″	1.9735″	57″	51.75″	62″	48-054-SLR	94 lbs.	48-064-SLR	105 lbs.
54″	1.9375″	63″	57.75″	68″	54-054-SLR	103 lbs.	54-064-SLR	116 lbs.
60″	1.9375″	69″	63.75″	74″	60-054-SLR	113 lbs.	60-064-SLR	127 lbs.
66″	1.9375″	75″	69.75″	80″	66-054-SLR	125 lbs.	66-064-SLR	138 lbs.
72″	1.9375″	81″	75.75″	86″	72-054-SLR	135 lbs.	72-064-SLR	149 lbs.

5, 6 & 7-INCH DIAMETER

SPECS

					CEMA E (5″)	CEMA E (6″)	CEMA E (7″)	
BELT	D	E	RL	SL	PART #	PART #	PART #	WEIGHT
24″	2.4375″	33″	27.75″	38″	24-055-SLR	24-065-SLR	24-075-SLR	91 lbs.
30″	2.4375″	39″	33.75″	44″	30-055-SLR	30-065-SLR	30-075-SLR	107 lbs.
36″	2.4375″	45″	39.75″	50″	36-055-SLR	36-065-SLR	36-075-SLR	122 lbs.
42″	2.4375″	51″	45.75″	56″	42-055-SLR	42-065-SLR	42-075-SLR	137 lbs.
48″	2.4375″	57″	51.75″	62″	48-055-SLR	48-065-SLR	48-075-SLR	153 lbs.
54″	2.4375″	63″	57.75″	68″	54-055-SLR	54-065-SLR	54-075-SLR	168 lbs.
60″	2.4375″	69″	63.75″	74″	60-055-SLR	60-065-SLR	60-075-SLR	184 lbs.
66″	2.4375″	75″	69.75″	80″	66-055-SLR	66-065-SLR	66-075-SLR	199 lbs.
72″	2.4375″	81″	75.75″	86″	72-055-SLR	72-065-SLR	72-075-SLR	215 lbs.
84″	2.4375″	93″	87.75″	98″	84-055-SLR	84-065-SLR	84-075-SLR	231 lbs.
96″	2.4375″	105″	99.75″	110″	96-055-SLR	96-065-SLR	96-075-SLR	247 lbs.

HD RUBBER DISC RETURN — LIVE SHAFT

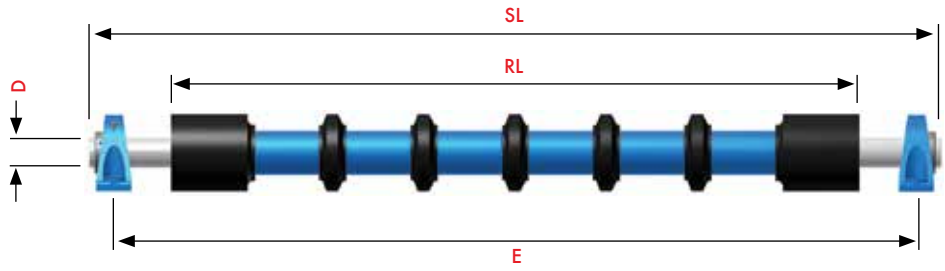

5 OR 6-INCH DIAMETER

SPECS

					CEMA D (5")		CEMA D (6")	
BELT	D	E	RL	SL	PART #	WEIGHT	PART #	WEIGHT
24"	1.9375"	33"	27.75"	38"	24-054-DLR	50 lbs.	24-064-DLR	57 lbs.
30"	1.9375"	39"	33.75"	44"	30-054-DLR	59 lbs.	30-064-DLR	66 lbs.
36"	1.9375"	45"	39.75"	50"	36-054-DLR	67 lbs.	36-064-DLR	75 lbs.
42"	1.9375"	51"	45.75"	56"	42-054-DLR	76 lbs.	42-064-DLR	85 lbs.
48"	1.9735"	57"	51.75"	62"	48-054-DLR	84 lbs.	48-064-DLR	94 lbs.
54"	1.9375"	63"	57.75"	68"	54-054-DLR	93 lbs.	54-064-DLR	103 lbs.
60"	1.9375"	69"	63.75"	74"	60-054-DLR	101 lbs.	60-064-DLR	112 lbs.
66"	1.9375"	75"	69.75"	80"	66-054-DLR	110 lbs.	66-064-DLR	122 lbs.
72"	1.9375"	81"	75.75"	86"	72-054-DLR	118 lbs.	72-064-DLR	131 lbs.

5 OR 6-INCH DIAMETER

SPECS

					CEMA E (5")		CEMA E (6")	
BELT	D	E	RL	SL	PART #	PART #	PART #	WEIGHT
24"	2.4375"	33"	27.75"	38"	24-055-DLR	57 lbs.	24-065-DLR	58 lbs.
30"	2.4375"	39"	33.75"	44"	30-055-DLR	66 lbs.	30-065-DLR	67 lbs.
36"	2.4375"	45"	39.75"	50"	36-055-DLR	75 lbs.	36-065-DLR	77 lbs.
42"	2.4375"	51"	45.75"	56"	42-055-DLR	84 lbs.	42-065-DLR	86 lbs.
48"	2.4375"	57"	51.75"	62"	48-055-DLR	93 lbs.	48-065-DLR	95 lbs.
54"	2.4375"	63"	57.75"	68"	54-055-DLR	102 lbs.	54-065-DLR	105 lbs.
60"	2.4375"	69"	63.75"	74"	60-055-DLR	111 lbs.	60-065-DLR	114 lbs.
66"	2.4375"	75"	69.75"	80"	66-055-DLR	120 lbs.	66-065-DLR	123 lbs.
72"	2.4375"	81"	75.75"	86"	72-055-DLR	128 lbs.	72-065-DLR	132 lbs.
84"	2.4375"	93"	87.75"	98"	84-055-DLR	146 lbs.	84-065-DLR	150 lbs.
96"	2.4375"	105"	99.75"	110"	96-055-DLR	164 lbs.	96-065-DLR	169 lbs.

7-INCH DIAMETER

SPECS

					CEMA E (7")	
BELT	D	E	RL	SL	PART #	WEIGHT
24"	2.4375"	33"	28.25"	38"	24-075-DLR	57 lbs.
30"	2.4375"	39"	34.25"	44"	30-075-DLR	68 lbs.
36"	2.4375"	45"	40.25"	50"	36-075-DLR	77 lbs.
42"	2.4375"	51"	46.25"	56"	42-075-DLR	86 lbs.
48"	2.4375"	57"	52.25"	62"	48-075-DLR	95 lbs.
54"	2.4375"	63"	58.25"	68"	54-075-DLR	105 lbs.
60"	2.4375"	69"	64.25"	74"	60-075-DLR	114 lbs.
66"	2.4375"	75"	70.25"	80"	66-075-DLR	123 lbs.
72"	2.4375"	81"	76.25"	86"	72-075-DLR	132 lbs.
84"	2.4375"	93"	88.25"	98"	84-075-DLR	142 lbs.
96"	2.4375"	105"	100.25"	110"	96-075-DLR	151 lbs.

LIVE SHAFT

Luff's Live Shaft design (providing larger shaft and pillow block bearings), reduces shaft deflection and can accept heavier loads.

Bearings not included.

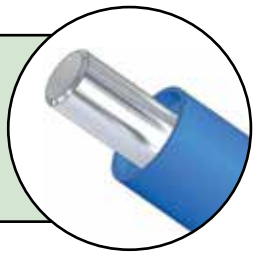

2400/3400 STEEL ROLLERS

4-INCH DIAMETER

SPECS

			CEMA B		CEMA C	
RL	SL	BELT	PART #	WEIGHT	PART #	WEIGHT
6.75″	8.125″	18 (E)	4BS07	5.0 lbs.	4CS07	5.5 lbs.
8.75″	10.125″	24 (E)	4BS09	6.0 lbs.	4CS09	6.7 lbs.
10.75″	12.125″	30 (E); 18 (V)	4BS11	7.1 lbs.	4CS11	7.9 lbs.
12.75″	14.125″	36 (E); 24 (V)	4BS13	8.2 lbs.	4CS13	9.2 lbs.
13.75″	15.125″	24 (V)	4BS14	8.7 lbs.	4CS14	9.8 lbs.
14.75″	16.125″	42 (E)	4BS15	9.3 lbs.	4CS15	10.4 lbs.
16.75	18.125″	48 (E); 30 (V)	4BS17	10.3 lbs.	4CS17	11.6 lbs.
19.75″	21.125″	36 (V)	-	-	4CS20	13.5 lbs.
22.75″	24.125″	42 (V)	-	-	4CS23	15.3 lbs.
25.75″	27.125″	48 (V)	-	-	4CS26	17.2 lbs.

5-INCH DIAMETER

SPECS

			CEMA B		CEMA C		CEMA D	
RL	SL	BELT	PART #	WEIGHT	PART #	WEIGHT	PART #	WEIGHT
6.75″	8.125″	18 (E)	5BS07	6.4 lbs.	5CS07	6.9 lbs.	5DS07	8.6 lbs.
8.75″	10.125″	24 (E)	5BS09	7.7 lbs.	5CS09	8.4 lbs.	5DS09	10.6 lbs.
10.75″	12.125″	30 (E); 18 (V)	5BS11	9.0 lbs.	5CS11	9.9 lbs.	5DS11	12.7 lbs.
12.75″	14.125″	36 (E); 24 (V)	5BS13	10.4 lbs.	5CS13	11.3 lbs.	5DS13	14.7 lbs.
13.75″	15.125″	24 (V)	5BS14	11.0 lbs.	5CS14	12.1 lbs.	5DS14	15.7 lbs.
14.75″	16.125″	42 (E)	5BS15	11.7 lbs.	5CS15	12.8 lbs.	5DS15	16.8 lbs.
16.75	18.125″	48 (E); 30 (V)	5BS17	13.0 lbs.	5CS17	14.3 lbs.	5DS17	19.5 lbs.
18.75″	20.125″	54 (E); 30 (U)	-	-	5CS19	15.8 lbs.	5DS19	21.8 lbs.
19.75″	21.125″	36 (V)	5BS20	15.0 lbs.	5CS20	16.5 lbs.	5DS20	22.9 lbs.
20.75″	22.125″	60 (E)	-	-	5CS21	17.2 lbs.	5DS21	24.0 lbs.
22.75″	24.125″	42 (V)	5BS23	16.9 lbs.	5CS23	18.7 lbs.	5DS23	26.2 lbs.
24.75″	26.125″	36 (U)	5BS25	18.9 lbs.	5CS25	20.2 lbs.	5DS25	28.5 lbs.
25.75″	27.125″	48 (V)	-	-	5CS26	20.9 lbs.	5DS26	29.6 lbs.
28.75″	30.125″	54 (V)	-	-	5CS29	23.1 lbs.	5DS29	29.6 lbs.
30.75″	32.125″	42 (U)	-	-	5CS31	24.6 lbs.	5DS31	35.2 lbs.
31.75″	33.125″	60 (V)	-	-	5CS32	25.4 lbs.	5DS32	36.3 lbs.
36.75″	38.125″	48 (U)	-	-	5CS37	32.0 lbs.	5DS37	41.9 lbs.
42.75″	44.125″	54 (U)	-	-	5CS43	37.2 lbs.	5DS43	45.1 lbs.
48.75″	50.125″	60 (U)	-	-	-	-	5DS49	55.3 lbs.

6-INCH DIAMETER

SPECS

			CEMA C		CEMA D	
RL	SL	BELT	PART #	WEIGHT	PART #	WEIGHT
6.75″	8.125″	18 (E)	6CS07	11.1 lbs.	6DS07	11.1 lbs.
8.75″	10.125″	24 (E)	6CS09	13.4 lbs.	6DS09	13.4 lbs.
10.75″	12.125″	30 (E); 18 (V)	6CS11	15.8 lbs.	6DS11	17.4 lbs.
12.75″	14.125″	36 (E); 24 (V)	6CS13	18.2 lbs.	6DS13	20.0 lbs.
13.75″	15.125″	24 (V)	6CS14	19.4 lbs.	6DS14	21.4 lbs.
14.75″	16.125″	42 (E)	6CS15	20.6 lbs.	6DS15	22.7 lbs.
16.75	18.125″	48 (E); 30 (V)	6CS17	23.7 lbs.	6DS17	25.3 lbs.
18.75″	20.125″	54 (E); 30 (U)	6CS19	26.3 lbs.	6DS19	28.0 lbs.
19.75″	21.125″	36 (V)	6CS20	27.6 lbs.	6DS20	29.3 lbs.
20.75″	22.125″	60 (E)	6CS21	28.8 lbs.	6DS21	30.6 lbs.
22.75″	24.125″	42 (V)	6CS23	31.4 lbs.	6DS23	33.2 lbs.
24.75″	26.125″	36 (U)	6CS25	34.0 lbs.	6DS25	35.9 lbs.
25.75″	27.125″	48 (V)	6CS26	35.3 lbs.	6DS26	37.2 lbs.
28.75″	30.125″	54 (V)	6CS29	39.1 lbs.	6DS29	41.2 lbs.
30.75″	32.125″	42 (U)	6CS31	41.7 lbs.	6DS31	43.8 lbs.
31.75″	33.125″	60 (V)	6CS32	43.0 lbs.	6DS32	45.1 lbs.
36.75″	38.125″	48 (U)	6CS37	49.4 lbs.	6DS37	51.7 lbs.
42.75″	44.125″	54 (U)	6CS43	57.1 lbs.	6DS43	59.7 lbs.
48.75″	50.125″	60 (U)	-	-	6DS49	67.6 lbs.

2400/3400 IMPACT ROLLERS

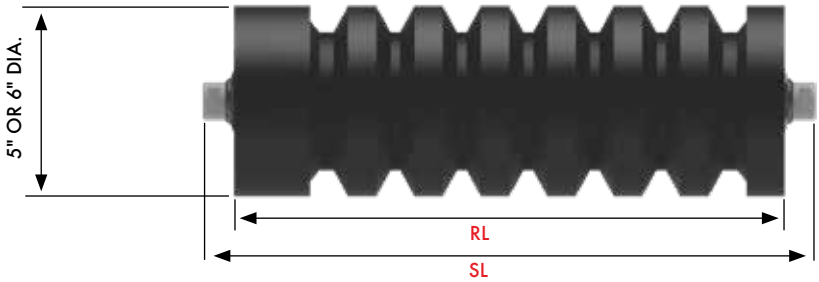

5-INCH DIAMETER

SPECS

			CEMA C		CEMA D	
RL	SL	BELT	PART #	WEIGHT	PART #	WEIGHT
6.5"	8.125"	18 (E)	5CD07	8.6 lbs.	5DD07	9.6 lbs.
8.5"	10.125"	24 (E)	5CD09	10.7 lbs.	5DD09	12.0 lbs.
10.5"	12.125"	30 (E); 18 (V)	5CD11	12.2 lbs.	5DD11	14.9 lbs.
12.5"	14.125"	36 (E); 24 (V)	5CD13	14.5 lbs.	5DD13	17.3 lbs.
13.5"	15.125"	24 (V)	5CD14	15.2 lbs.	5DD14	18.7 lbs.
14.5"	16.125"	42 (E)	5CD15	16.4 lbs.	5DD15	19.8 lbs.
16.5	18.125"	48 (E); 30 (V)	5CD17	18.4 lbs.	5DD17	22.9 lbs.
18.5"	20.125"	54 (E); 30 (U)	5CD19	20.6 lbs.	5DD19	25.5 lbs.
19.5"	21.125"	36 (V)	5CD20	21.9 lbs.	5DD20	27.1 lbs.
20.5"	22.125"	60 (E)	5CD21	22.8 lbs.	5DD21	28.0 lbs.
22.5"	24.125"	42 (V)	5CD23	25.0 lbs.	5DD23	31.1 lbs.
24.5"	26.125"	36 (U)	5CD25	26.8 lbs.	5DD25	33.5 lbs.
25.5"	27.125"	48 (V)	5CD26	28.3 lbs.	5DD26	34.7 lbs.
28.5"	30.125"	54 (V)	5CD29	31.1 lbs.	5DD29	38.9 lbs.
30.5"	32.125"	42 (U)	5CD31	33.4 lbs.	5DD31	41.5 lbs.
31.5"	33.125"	60 (V)	5CD32	34.4 lbs.	5DD32	43.1 lbs.
36.5"	38.125"	48 (U)	5CD37	38.9 lbs.	5DD37	49.7 lbs.
42.5"	44.125"	54 (U)	5CD43	44.6 lbs.	5DD43	57.5 lbs.
48.5"	50.125"	60 (U)	5CD49	52.2 lbs.	5DD49	65.9 lbs.

6-INCH DIAMETER

SPECS

			CEMA C		CEMA D	
RL	SL	BELT	PART #	WEIGHT	PART #	WEIGHT
6.5"	8.125"	18 (E)	6CD07	9.4 lbs.	6DD07	11.2 lbs.
8.5"	10.125"	24 (E)	6CD09	11.9 lbs.	6DD09	14.2 lbs.
10.5"	12.125"	30 (E); 18 (V)	6CD11	13.7 lbs.	6DD11	17.7 lbs.
12.5"	14.125"	36 (E); 24 (V)	6CD13	16.6 lbs.	6DD13	20.7 lbs.
13.5"	15.125"	24 (V)	6CD14	17.4 lbs.	6DD14	22.3 lbs.
14.5"	16.125"	42 (E)	6CD15	18.8 lbs.	6DD15	24.0 lbs.
16.5	18.125"	48 (E); 30 (V)	6CD17	21.2 lbs.	6DD17	27.7 lbs.
18.5"	20.125"	54 (E); 30 (U)	6CD19	23.9 lbs.	6DD19	30.8 lbs.
19.5"	21.125"	36 (V)	6CD20	25.6 lbs.	6DD20	32.9 lbs.
20.5"	22.125"	60 (E)	6CD21	26.4 lbs.	6DD21	33.9 lbs.
22.5"	24.125"	42 (V)	6CD23	29.2 lbs.	6DD23	37.7 lbs.
24.5"	26.125"	36 (U)	6CD25	31.0 lbs.	6DD25	40.4 lbs.
25.5"	27.125"	48 (V)	6CD26	33.1 lbs.	6DD26	42.2 lbs.
28.5"	30.125"	54 (V)	6CD29	36.5 lbs.	6DD29	47.5 lbs.
30.5"	32.125"	42 (U)	6CD31	39.0 lbs.	6DD31	50.6 lbs.
31.5"	33.125"	60 (V)	6CD32	40.4 lbs.	6DD32	52.7 lbs.
36.5"	38.125"	48 (U)	6CD37	46.1 lbs.	6DD37	60.6 lbs.
42.5"	44.125"	54 (U)	6CD43	52.7 lbs.	6DD43	70.4 lbs.
48.5"	50.125"	60 (U)	6CD49	61.6 lbs.	6DD49	80.9 lbs.

BELT

(E): Equal Roll Assemblies
(U): Unequal Roll Assemblies
(V): 10° V-Returns

CEMA D ROLLERS

- 1.25" turned down to 25mm
- Come with 6305 bearings

SKF Equipped

2400/3400 STEEL RETURN ROLLERS

5-INCH DIAMETER

SPECS

			CEMA B		CEMA C		CEMA D	
RL	SL	BELT	PART #	WEIGHT	PART #	WEIGHT	PART #	WEIGHT
21.75	24.5	18	18B-500-SRC	16.5 lbs.	18C-500-SRC	18.3 lbs.	18-054-HRSC	28.2 lbs.
27.75	30.5	24	24B-500-SRC	22.1 lbs.	24C-500-SRC	22.7 lbs.	24-054-HSRC	36.7 lbs
33.75	36.5	30	30B-500-SRC	26.3 lbs.	30C-500-SRC	27.2 lbs.	30-054-HSRC	42.1 lbs.
39.75	42.5	36	36B-500-SRC	31.2 lbs.	36C-500-SRC	31.6 lbs.	36-054-HSRC	51.3 lbs.
45.75	48.5	42	42B-500-SRC	36 lbs.	42C-500-SRC	36.2 lbs.	42-054-HSRC	55.9 lbs.
51.75	54.5	48	48B-500-SRC	40.3 lbs.	48C-500-SRC	40.5 lbs.	48-054-HSRC	62.8 lbs.
57.75	60.5	54	-	-	-	-	54-054-HSRC	69.7 lbs.
63.75	66.5	60	-	-	-	-	60-054-HSRC	76.7 lbs.
69.75	72.5	66	-	-	-	-	66-054-HSRC	83.6 lbs.
75.75	78.5	72	-	-	-	-	72-054-HSRC	90.5 lbs.

6-INCH DIAMETER

SPECS

			CEMA C		CEMA D	
RL	SL	BELT	PART #	WEIGHT	PART #	WEIGHT
21.75	24.5	18	18-063-HSRC	30.3 lbs.	18-064-HSRC	32.4 lbs.
27.75	30.5	24	24-063-HSRC	37.7 lbs.	24-064-HSRC	40.3 lbs.
33.75	36.5	30	30-063-HSRC	44.4 lbs.	30-064-HSRC	48.2 lbs.
39.75	42.5	36	36-063-HSRC	52.6 lbs.	36-064-HSRC	58.7 lbs.
45.75	48.5	42	42-063-HSRC	60.1 lbs.	42-064-HSRC	64.1 lbs.
51.75	54.5	48	48-063-HSRC	64.8 lbs.	48-064-HSRC	72.0 lbs.
57.75	60.5	54	-	-	54-064-HSRC	79.9 lbs.
63.75	66.5	60	-	-	60-064-HSRC	87.9 lbs.
69.75	72.5	66	-	-	66-064-HSRC	100.3 lbs.
75.75	78.5	72	-	-	72-064-HSRC	103.7 lbs.

SKF Equipped

2400/3400 DISC RETURN ROLLERS

5-INCH DIAMETER

SPECS

			CEMA C		CEMA D	
RL	SL	BELT	PART #	WEIGHT	PART #	WEIGHT
21.25	24.5	18	18C-500-DRC	27.1 lbs.	18-054-HDRC	30.8 lbs.
27.25	30.5	24	24C-500-DRC	32.2 lbs.	24-054-HDRC	37.9 lbs.
33.25	36.5	30	30C-500-DRC	37.3 lbs.	30-054-HDRC	49.9 lbs.
39.25	42.5	36	36C-500-DRC	42.4 lbs.	36-054-HDRC	57.6 lbs.
45.25	48.5	42	42C-500-DRC	47.5 lbs.	42-054-HDRC	66.3 lbs.
51.25	54.5	48	48C-500-DRC	52.6 lbs.	48-054-HDRC	72.1 lbs.
57.25	60.5	54	-	-	54-054-HDRC	80.8 lbs.
63.25	66.5	60	-	-	60-054-HDRC	85.5 lbs.
69.25	72.5	66	-	-	66-054-HDRC	97.5 lbs.
75.25	78.5	72	-	-	72-054-HDRC	101.9 lbs.

6-INCH DIAMETER

SPECS

			CEMA C		CEMA D	
RL	SL	BELT	PART #	WEIGHT	PART #	WEIGHT
21.25	24.5	18	18-063-HDRC	31.5 lbs.	18-064-HDRC	33.5 lbs.
27.25	30.5	24	24-063-HDRC	37.0 lbs.	24-064-HDRC	39.1 lbs
33.25	36.5	30	30-063-HDRC	43.5 lbs.	30-064-HDRC	52.0 lbs.
39.25	42.5	36	36-063-HDRC	48.0 lbs.	36-064-HDRC	59.4 lbs.
45.25	48.5	42	42-063-HDRC	54.5 lbs.	42-064-HDRC	67.8 lbs.
51.25	54.5	48	48-063-HDRC	61 lbs.	48-064-HDRC	73.2 lbs.
57.25	60.5	54	-	-	54-064-HDRC	81.7 lbs.
63.25	66.5	60	-	-	60-064-HDRC	86.1 lbs.
69.25	72.5	66	-	-	66-064-HDRC	97.8 lbs.
75.25	78.5	72	-	-	72-064-HDRC	103.9 lbs.

URETHANE DISCS
available

SKF Equipped

EQUAL ROLL STEEL

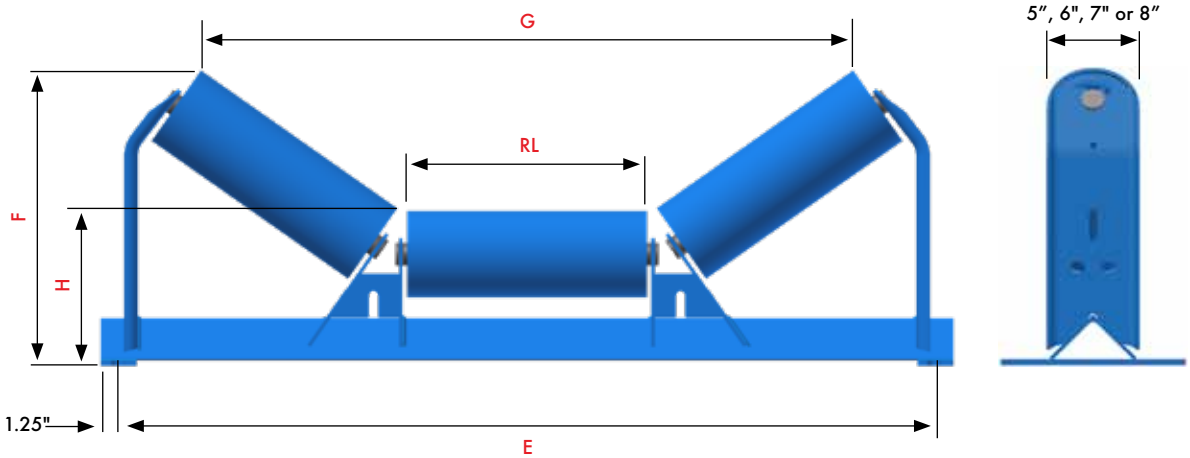

HEAVYDUTY HD

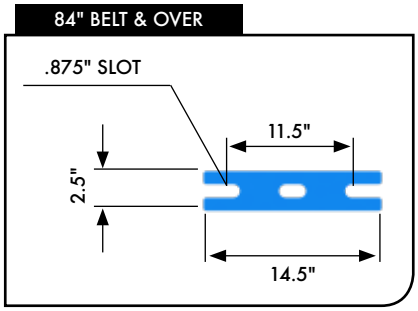

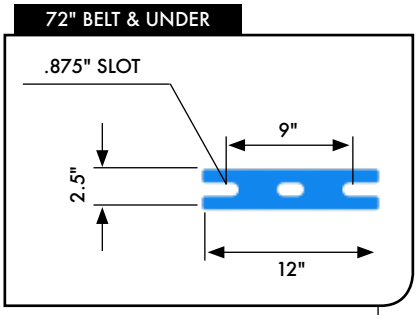

FEATURES

- Available in 5", 6", 7" and 8" diameters
- Steel Endcap
- Shell standard .188" or available .250"

1.75" Shaft	6308 Bearing	HD	5", 6", 7" & 8" Rolls Available

- Anti-Lock Shield/High Moisture Seal standard
- Triple labyrinth seal
- Back seal
- 6308 SKF ball bearing
- 1.75" shaft, turned down to 40mm for bearing
- Standard and custom rolls available
- For Heavy Duty applications
- Unmatched Luff quality complete with 2-year warranty

SKF Equipped

HIGH MOISTURE SEAL
STANDARD

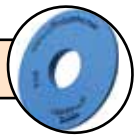

LOAD RATINGS FOR CEMA E IDLERS (lbs.)

	Trough Angle			
Belt Width (inches)	20°	35°	45°	Return
36	1800	1800	1800	1000
42	1800	1800	1800	1000
48	1800	1800	1800	1000
54	1800	1800	1800	925
60	1800	1800	1800	850
72	1800	1800	1800	700
84	1800	1674	1620	550
96	1750	1628	1575	400

CEMA E 6-INCH DIAMETER

20° ANGLE

BELT	E	F	G	H	RL	PART #	WEIGHT
36″	45″	15.5″	39.25″	10.75″	12.75″	36-265-HSE	127 lbs.
42″	51″	16.25″	45″	10.75″	14.75″	42-265-HSE	135 lbs.
48″	57″	16.875″	50.75″	10.75″	16.75″	48-265-HSE	143 lbs.
54″	63″	17.625″	56.5″	10.75″	18.75″	54-265-HSE	151 lbs.
60″	69″	18.25″	62.25″	10.75″	20.75″	60-265-HSE	177 lbs.
72″	81″	20.375″	73.75″	11.5″	24.75″	72-265-HSE	232 lbs.
84″	93″	21.875″	85.25″	11.625″	28.75″	84-265-HSE	267 lbs.
96″	105″	23.25″	96.75″	11.625″	32.75″	96-265-HSE	302 lbs.

35° ANGLE

BELT	E	F	G	H	RL	PART #	WEIGHT
36″	45″	18.375″	35″	10.75″	12.75″	36-365-HSE	133 lbs.
42″	51″	19.5″	40.25″	10.75″	14.75″	42-365-HSE	141 lbs.
48″	57″	20.625″	45.5″	10.75″	16.75″	48-365-HSE	149 lbs.
54″	63″	21.75″	50.75″	10.75″	18.75″	54-365-HSE	157 lbs.
60″	69″	22.875″	56″	10.75″	20.75″	60-365-HSE	183 lbs.
72″	81″	25.875″	66.625″	11.5″	24.75″	72-365-HSE	238 lbs.
84″	93″	28.375″	77.125″	11.625″	28.75″	84-365-HSE	273 lbs.
96″	105″	30.625″	87.75″	11.625″	32.75″	96-365-HSE	308 lbs.

45° ANGLE

BELT	E	F	G	H	RL	PART #	WEIGHT
36″	45″	20.125″	30.875″	10.75″	12.75″	36-465-HSE	138 lbs.
42″	51″	21.5″	37.25″	10.75″	14.75″	42-465-HSE	146 lbs.
48″	57″	22.875″	42.125″	10.75″	16.75″	48-465-HSE	154 lbs.
54″	63″	24″	47″	10.75″	18.75″	54-465-HSE	162 lbs.
60″	69″	25.5″	51.875″	10.75″	20.75″	60-465-HSE	188 lbs.
72″	81″	29″	61.625″	11.5″	24.75″	72-465-HSE	243 lbs.
84″	93″	32″	77.375″	11.625″	28.75″	84-465-HSE	278 lbs.
96″	105″	34.875″	81.125″	11.625″	32.75″	96-465-HSE	313 lbs.

CEMA E 7-INCH DIAMETER

20° ANGLE

BELT	E	F	G	H	RL	PART #	WEIGHT
36″	45″	16″	38.875″	11.25″	12.75″	36-275-HSE	169 lbs.
42″	51″	16.75″	44.625″	11.25″	14.75″	42-275-HSE	180 lbs.
48″	57″	17.375″	50.375″	11.25″	16.75″	48-275-HSE	191 lbs.
54″	63″	18.125″	56.125″	11.25″	18.75″	54-275-HSE	202 lbs.
60″	69″	18.75″	61.875″	11.25″	20.75″	60-275-HSE	235 lbs.
72″	81″	20.875″	73.375″	12″	24.75″	72-275-HSE	267 lbs.
84″	93″	22.375″	84.875″	12.125″	28.75″	84-275-HSE	302 lbs.
96″	105″	23.75″	96.375″	12.125″	32.75″	96-275-HSE	337 lbs.

35° ANGLE

BELT	E	F	G	H	RL	PART #	WEIGHT
36″	45″	18.75″	34.5″	11.25″	12.75″	36-375-HSE	175 lbs.
42″	51″	19.875″	39.75″	11.25″	14.75″	42-375-HSE	186 lbs.
48″	57″	21″	45″	11.25″	16.75″	48-375-HSE	197 lbs.
54″	63″	22.125″	50.25″	11.25″	18.75″	54-375-HSE	208 lbs.
60″	69″	23.75″	55.5″	11.25″	20.75″	60-375-HSE	241 lbs.
72″	81″	26.75″	66.125″	12″	24.75″	72-375-HSE	273 lbs.
84″	93″	28.75″	76.625″	12.125″	28.75″	84-375-HSE	308 lbs.
96″	105″	31″	87.25″	12.125″	32.75″	96-375-HSE	343 lbs.

45° ANGLE

BELT	E	F	G	H	RL	PART #	WEIGHT
36″	45″	20.5″	31.625″	11.25″	12.75″	36-475-HSE	180 lbs.
42″	51″	21.875″	36.5″	11.25″	14.75″	42-475-HSE	191 lbs.
48″	57″	23.25″	41.375″	11.25″	16.75″	48-475-HSE	202 lbs.
54″	63″	24.375″	46.25″	11.25″	18.75″	54-475-HSE	213 lbs.
60″	69″	25.875″	51.125″	11.25″	20.75″	60-475-HSE	246 lbs.
72″	81″	29.375″	60.875″	12″	24.75″	72-475-HSE	278 lbs.
84″	93″	32.375″	70.625″	12.125″	28.75″	84-475-HSE	313 lbs.
96″	105″	35.25″	80.375″	12.125″	32.75″	96-475-HSE	348 lbs.

EQUAL ROLL IMPACT

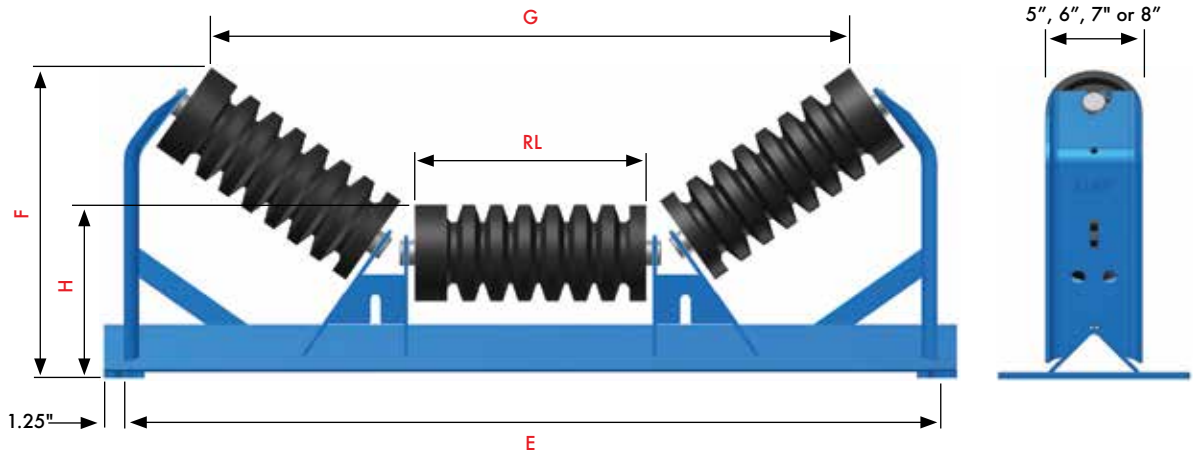

HEAVYDUTY HD

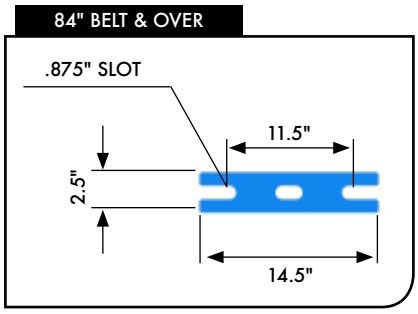

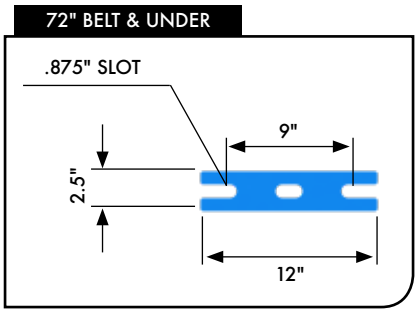

FEATURES

- Available in 5", 6", 7" and 8" diameters
- Standard Luff SAE triple labyrinth sealing arrangement
- Standard and custom rolls available

SKF Sealed Bearing	2-Year Warranty	HD	5" – 8" Rolls Available

- For Heavy Duty applications
- Unmatched Luff quality complete with 2-year warranty
- Gusseted reinforced frame

SKF Equipped

HIGH MOISTURE SEAL
STANDARD

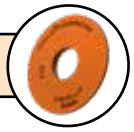

QUICK REFERENCE

CEMA E	HEAVY DUTY	UP TO 6,000 STPH	LUMPS UP TO 12"

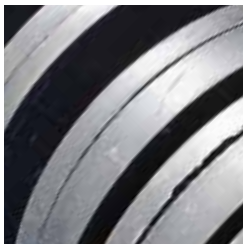

CEMA E 6-INCH DIAMETER

20° ANGLE

BELT	E	F	G	H	RL	PART #	WEIGHT
36″	45″	15.5″	39.25″	10.75″	12.5″	36-265-HDE	146 lbs.
42″	51″	16.25″	45″	10.75″	14.5″	42-265-HDE	156 lbs.
48″	57″	16.875″	50.75″	10.75″	16.5″	48-265-HDE	167 lbs.
54″	63″	17.625″	56.5″	10.75″	18.5″	54-265-HDE	177 lbs.
60″	69″	18.25″	62.25″	10.75″	20.5″	60-265-HDE	205 lbs.
72″	81″	20.375″	73.75″	11.5″	24.5″	72-265-HDE	265 lbs.
84″	93″	21.875″	85.25″	11.625″	28.5″	84-265-HDE	306 lbs.
96″	105″	23.25″	96.75″	11.625″	32.5″	96-265-HDE	346 lbs.

35° ANGLE

BELT	E	F	G	H	RL	PART #	WEIGHT
36″	45″	18.375″	35″	10.75″	12.5″	36-365-HDE	152 lbs.
42″	51″	19.5″	40.25″	10.75″	14.5″	42-365-HDE	162 lbs.
48″	57″	20.625″	45.5″	10.75″	16.5″	48-365-HDE	173 lbs.
54″	63″	21.75″	50.75″	10.75″	18.5″	54-365-HDE	183 lbs.
60″	69″	22.875″	56″	10.75″	20.5″	60-365-HDE	211 lbs.
72″	81″	25.875″	66.625″	11.5″	24.5″	72-365-HDE	271 lbs.
84″	93″	28.375″	77.125″	11.625″	28.5″	84-365-HDE	312 lbs.
96″	105″	30.625″	87.75″	11.625″	32.5″	96-365-HDE	352 lbs.

45° ANGLE

BELT	E	F	G	H	RL	PART #	WEIGHT
36″	45″	20.125″	30.875″	10.75″	12.5″	36-465-HDE	157 lbs.
42″	51″	21.5″	37.25″	10.75″	14.5″	42-465-HDE	167 lbs.
48″	57″	22.875″	42.125″	10.75″	16.5″	48-465-HDE	178 lbs.
54″	63″	24″	47″	10.75″	18.5″	54-465-HDE	188 lbs.
60″	69″	25.5″	51.875″	10.75″	20.5″	60-465-HDE	216 lbs.
72″	81″	29″	61.625″	11.5″	24.5″	72-465-HDE	276 lbs.
84″	93″	32″	71.375″	11.625″	28.5″	84-465-HDE	317 lbs.
96″	105″	34.875″	81.125″	11.625″	32.5″	96-465-HDE	357 lbs.

CEMA E 7-INCH DIAMETER

20° ANGLE

BELT	E	F	G	H	RL	PART #	WEIGHT
36″	45″	16″	38.875″	11.25″	12.5″	36-275-HDE	188 lbs.
42″	51″	16.75″	44.625″	11.25″	14.5″	42-275-HDE	202 lbs.
48″	57″	17.375″	50.375″	11.25″	16.5″	48-275-HDE	215 lbs.
54″	63″	18.125″	56.125″	11.25″	18.5″	54-275-HDE	228 lbs.
60″	69″	18.75″	61.875″	11.25″	20.5″	60-275-HDE	263 lbs.
72″	81″	20.875″	73.375″	12″	24.5″	72-275-HDE	300 lbs.
84″	93″	22.375″	84.875″	12.125″	28.5″	84-275-HDE	339 lbs.
96″	105″	23.75″	96.375″	12.125″	32.5″	96-275-HDE	378 lbs.

35° ANGLE

BELT	E	F	G	H	RL	PART #	WEIGHT
36″	45″	18.75″	34.5″	11.25″	12.5″	36-375-HDE	194 lbs.
42″	51″	19.875″	39.75″	11.25″	14.5″	42-375-HDE	208 lbs.
48″	57″	21″	45″	11.25″	16.5″	48-375-HDE	222 lbs.
54″	63″	22.125″	50.25″	11.25″	18.5″	54-375-HDE	235 lbs.
60″	69″	23.75″	55.5″	11.25″	20.5″	60-375-HDE	270 lbs.
72″	81″	26.75″	66.125″	12″	24.5″	72-375-HDE	308 lbs.
84″	93″	28.75″	76.625″	12.125″	28.5″	84-375-HDE	350 lbs.
96″	105″	31″	87.25″	12.125″	32.5″	96-375-HDE	388 lbs.

45° ANGLE

BELT	E	F	G	H	RL	PART #	WEIGHT
36″	45″	20.5″	31.625″	11.25″	12.5″	36-475-HDE	199 lbs.
42″	51″	21.875″	36.5″	11.25″	14.5″	42-475-HDE	213 lbs.
48″	57″	23.25″	41.375″	11.25″	16.5″	48-475-HDE	228 lbs.
54″	63″	24.375″	46.25″	11.25″	18.5″	54-475-HDE	241 lbs.
60″	69″	25.875″	51.125″	11.25″	20.5″	60-475-HDE	276 lbs.
72″	81″	29.375″	60.875″	12″	24.5″	72-475-HDE	315 lbs.
84″	93″	32.375″	70.625″	12.125″	28.5″	84-475-HDE	360 lbs.
96″	105″	35.25″	80.375″	12.125″	32.5″	96-475-HDE	396 lbs.

STEEL RETURN ROLLER

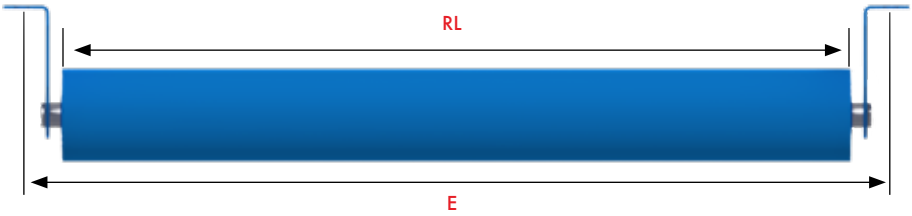

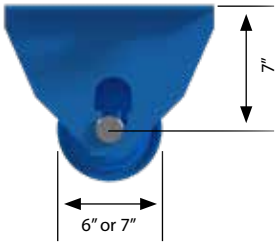

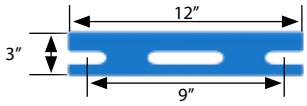

CEMA E

SPECS

			6" Diameter		7" Diameter	
BELT	E	RL	PART #	WEIGHT	PART #	WEIGHT
36"	45"	39.75"	36-065-HSR	87.2 lbs.	36-075-HSRC	109.2 lbs.
42"	51"	45.75"	42-065-HSR	97.2 lbs.	42-075-HSRC	122.0 lbs.
48"	57"	51.75"	48-065-HSR	107.3 lbs.	48-075-HSRC	135.3 lbs.
54"	63"	57.75"	54-065-HSR	117.1 lbs.	54-075-HSRC	149.3 lbs.
60"	69"	63.75"	60-065-HSR	127.0 lbs.	60-075-HSRC	163.0 lbs.
66"	75"	69.75"	66-065-HSR	137.0 lbs.	66-075-HSRC	174.5 lbs.
72"	81"	75.75"	72-065-HSR	148.0 lbs.	72-075-HSRC	188.0 lbs.
84"	93"	87.75"	84-065-HSR	166.3 lbs.	84-075-HSRC	214.1 lbs.
96"	105"	99.75"	96-065-HSR	187.2 lbs.	96-075-HSRC	240.0 lbs.

DISC RETURN ROLLER

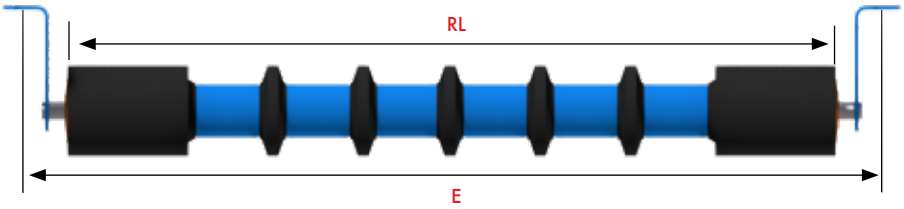

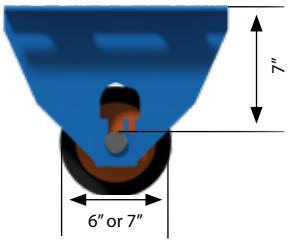

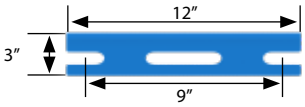

CEMA E

SPECS

			6" Diameter		7" Diameter	
BELT	E	RL	PART #	WEIGHT	PART #	WEIGHT
36"	45"	39.25"	36-065-HDR	76.2 lbs.	36-075-HDRC	86.0 lbs.
42"	51"	45.25"	42-065-HDR	85.4 lbs.	42-075-HDRC	95.1 lbs.
48"	57"	51.25"	48-065-HDR	94.1 lbs.	48-075-HDRC	105.4 lbs.
54"	63"	57.25"	54-065-HDR	103.0 lbs.	54-075-HDRC	114.3 lbs.
60"	69"	63.25"	60-065-HDR	113.3 lbs.	60-075-HDRC	124.0 lbs.
66"	75"	69.25"	66-065-HDR	122.2 lbs.	66-075-HDRC	133.2 lbs.
72"	81"	75.25"	72-065-HDR	131.0 lbs.	72-075-HDRC	143.1 lbs.
84"	93"	87.25"	84-065-HDR	150.1 lbs.	84-075-HDRC	162.0 lbs.
96"	105"	99.25"	96-065-HDR	168.1 lbs.	96-075-HDRC	181.2 lbs.

4500 REPLACEMENT ROLLERS

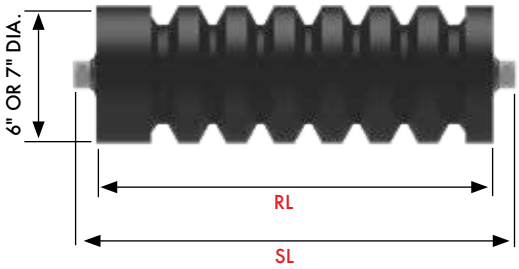

6 & 7-INCH DIAMETER

SPECS

			CEMA E STEEL		
RL	SL	BELT	6" PART #	7" PART #	WEIGHT (6"/7")
6.75"	8.325"	All Unequal Rolls	6ES07	7ES07	16/20 lbs.
12.75"	14.375"	36 (E)	6ES13	7ES13	24/31 lbs.
14.75"	16.375"	42 (E)	6ES15	7ES15	27/35 lbs.
16.75"	18.375"	48 (E)	6ES17	7ES17	29/38 lbs.
18.75"	20.375"	54 (E)	6ES19	7ES19	32/42 lbs.
19.75"	21.375"	36 (V)	6ES20	7ES20	33/44 lbs.
20.75"	22.375"	60 (E)	6ES21	7ES21	35/46 lbs.
22.75"	24.375"	42 (V)	6ES23	7ES23	37/49 lbs.
24.75"	26.375"	36 (U); 72 (E)	6ES25	7ES25	39/52 lbs.
25.75"	27.375"	48 (V)	6ES26	7ES26	41/55 lbs.
28.75"	30.375"	54 (V); 84 (E)	6ES29	7ES29	46/61 lbs.
30.75"	32.375"	42 (U)	6ES31	7ES31	49/65 lbs.
31.75"	33.375"	60 (V)	6ES32	7ES32	51/67 lbs.
32.75"	34.375"	96 (E)	6ES33	7ES33	53/70 lbs.
36.75"	38.375"	48 (U)	6ES37	7ES37	59/79 lbs.
37.75"	39.375"	72 (V)	6ES38	7ES38	61/81 lbs.
42.75"	44.375"	54 (U)	6ES43	7ES43	69/92 lbs.
43.75"	45.375"	84 (V)	6ES44	7ES44	71/94 lbs.
48.75"	50.125"	60 (U)	6ES49	7ES49	79/105 lbs.
49.75"	51.375"	96 (V)	6ES50	7ES50	81/107 lbs.
60.75"	62.375"	72 (U)	6ES61	7ES61	99/126 lbs.
72.75"	74.375"	84 (U)	6ES73	7ES73	119/158 lbs.
84.75"	86.375"	96 (U)	6ES85	7ES85	139/184 lbs.

6 & 7-INCH DIAMETER

SPECS

			CEMA E IMPACT		
RL	SL	BELT	6" PART #	7" PART #	WEIGHT (6"/7")
6.5"	8.325"	All Unequal Rolls	6ED07	7ED07	9/12 lbs.
12.5"	14.375"	36 (E)	6ED13	7ED13	20/25 lbs.
14.5"	16.375"	42 (E)	6ED15	7ED15	25/30 lbs.
16.5"	18.375"	48 (E)	6ED17	7ED17	29/35 lbs.
18.5"	20.375"	54 (E)	6ED19	7ED19	33/40 lbs.
19.5"	21.375"	36 (V)	6ED20	7ED20	35/42 lbs.
20.5"	22.375"	60 (E)	6ED21	7ED21	38/45 lbs.
22.5"	24.375"	42 (V)	6ED23	7ED23	42/50 lbs.
24.5"	26.375"	36 (U); 72 (E)	6ED25	7ED25	46/55 lbs.
25.5"	27.375"	48 (V)	6ED26	7ED26	48/58 lbs.
28.5"	30.375"	54 (V); 84 (E)	6ED29	7ED29	55/66 lbs.
30.5"	32.375"	42 (U)	6ED31	7ED31	59/70 lbs.
31.5"	33.375"	60 (V)	6ED32	7ED32	61/73 lbs.
32.5"	34.375"	96 (E)	6ED33	7ED33	63/75 lbs.
36.5"	38.375"	48 (U)	6ED37	7ED37	72/86 lbs.
37.5"	39.375"	72 (V)	6ED38	7ED38	74/88 lbs.
42.5"	44.375"	54 (U)	6ED43	7ED43	84/100 lbs.
43.5"	45.375"	84 (V)	6ED44	7ED44	86/102 lbs.
48.5"	50.125"	60 (U)	6ED49	7ED49	97/115 lbs.
49.5"	51.375"	96 (V)	6ED50	7ED50	99/117 lbs.
60.5"	62.375"	72 (U)	6ED61	7ED61	122/144 lbs.
72.5"	74.375"	84 (U)	6ED73	7ED73	148/175 lbs.
84.5"	86.375"	96 (U)	6ED85	7ED85	173/204 lbs.

BELT

(E): Equal Roll Assemblies **(U):** Unequal Roll Assemblies **(V):** 10° V-Returns

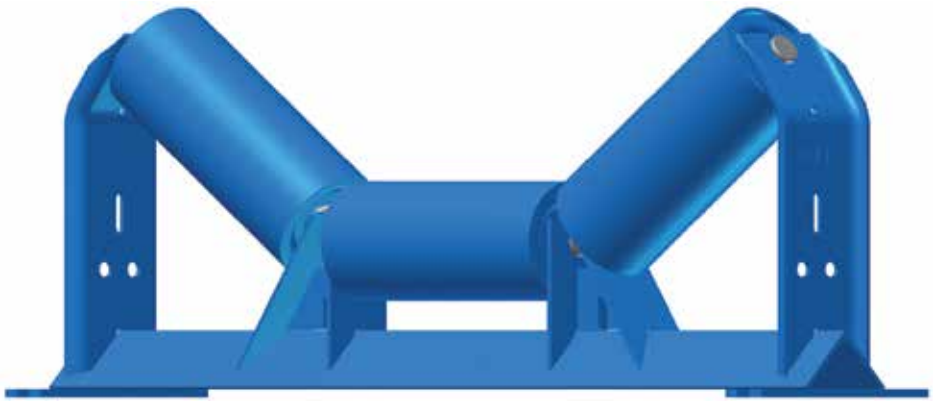

ENGINEERED DRAWINGS & DIMENSIONS AVAILABLE UPON REQUEST

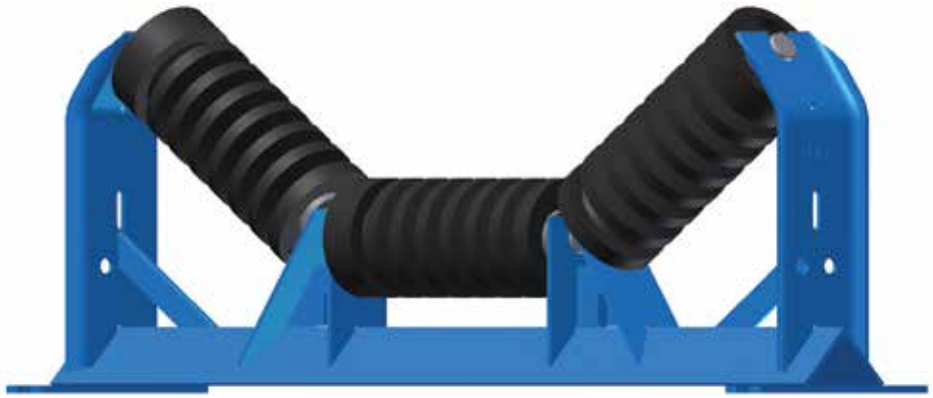

HEAVYDUTY HD

FEATURES

- Available in 6", 7", 8" and 10" diameters
- Steel End Cap
- Shell standard .250"

2.188" Shaft	6310 Bearing	HD	Steel End Cap

- Triple labyrinth seal
- Back seal
- 6310 SKF ball bearing
- 2.188" shaft, turned down to 50mm for bearing
- Standard and custom rolls available
- For Heavy Duty applications
- Unmatched Luff quality complete with 2-year warranty

SKF Equipped

PART # GUIDE (e.g.,.: 8FS15)

8	F	S	15
ROLL DIA.	CEMA SERIES	(S) STEEL (D) IMPACT	ROLL LENGTH

LOAD RATINGS FOR CEMA F IDLERS (lbs.)

	Trough Angle			
Belt Width (inches)	20°	35°	45°	Return
60	3000	3000	3000	1500
72	3000	3000	3000	1200
84	3000	3000	3000	900
96	2800	2800	2800	600

COMPOSITE ROLLS

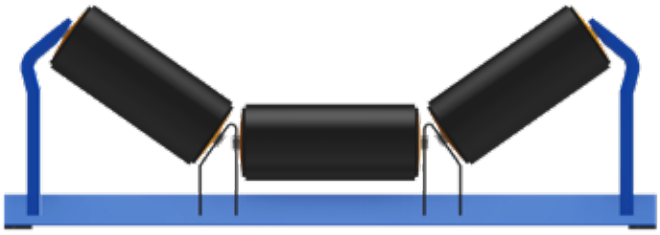

TOUGH & DURABLE
Composite Tubing

OPTIONAL ANTI-LOCK
SHIELD Available

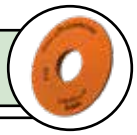

HIGH MOISTURE
SEAL Available

FEATURES

- Compared to traditional steel, polyvinyl chloride (PVC) and high-density polyethylene (HDPE) products, Luff's composite is exceptionally lightweight, strong and durable
- Longer lasting than comparative products resulting in less downtime and increased conveyor efficiency

Lightweight	Corrosion Resistant	Load Ratings to CEMA E Available

- Coupled with Luff's patented polymer endcaps, the Composite Series offers the most reliable product on the market today
- Exceptional resistance to abrasion and corrosion, even in acidic environments
- Rolls exhibit minimal expansion and contraction, decreasing stress related idler roll failure
- Built for the most demanding environments and applications

LIGHTWEIGHT
Up to **40%** lighter than comparative steel models. (based on models shown)

CATENARY IDLERS

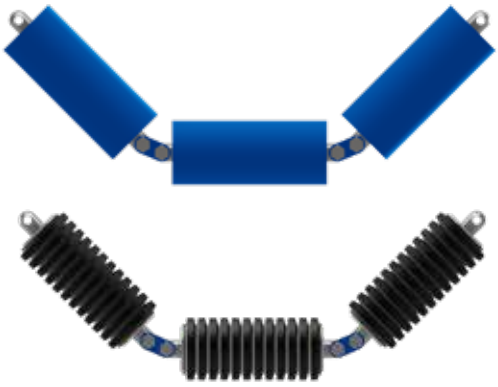

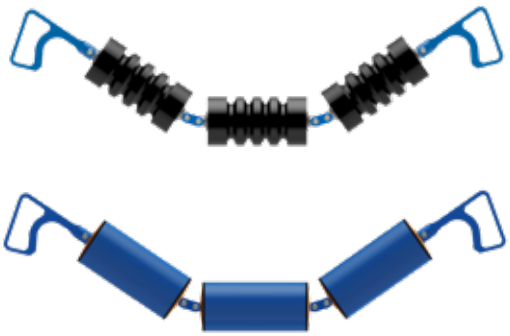

AVAILABLE IN CEMA B–F

FEATURES

- Non-rigid frame is perfect for underground and portable overland conveyors and allows for easy belt tracking
- Low profile design for areas with space constraints
- Grade 8 bolts and heavy connector links
- Various handle/connections available
- Quick and easy installation

CAMBAROLL

Whether you are conveying material below ground or above ground Luff can improve your Conveying Performance without replacing existing structure or idler frames.

FEATURES

- Complete with Luff's standard and proven sealed bearings and triple labyrinth seal design.
- Designed for both extreme load and impact, Luff provides 10 bearings in a 5 roll assembly and 6 bearings in a 3 roll confirguration.
- Follows same belt profile as OEM Limberroll
- Pin Style and Slot Style available
- Retrofits into existing oarlocks and brackets

CLEANWEAVE

The Clean Weave Return Roll is comprised of polyurethane discs which offer abrasion resistance and wear life at least 5 times longer than steel or rubber rolls.

- Engineered with 90 durometer discs designed with a self-cleaning spiral surface to prevent any material build-up between the discs or on the belt.
- This specially formulated material is resistant to rust and corrosion
- The spiral design cleans the bottom side of the conveyor belt through an augering action.
- The spiral design ensures the roll discs always contact the belt in a new area increasing the cleaning action.

GYPSUM ROLLERS

Gypsum Rollers are manufactured with max TIR of 0.020" compared to industry standard TIR of 0.125", providing the highest level of concentricity.

All bearings are greased and sealed for life providing an optimal sealing arrangement and longer lasting rollers.

LOCKING CLIP

Clip locks shafts to end plate using tek screw

Plug design locks shafts into middle bracket

Newly designed Locking Clips are quick and easy to install on any of Luff's Idler assemblies.

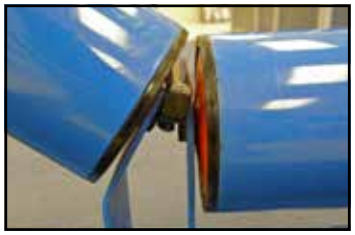

FEATURES

- Easy removal for roller changing
- Will not break and can be reused many times
- No tool required for middle bracket plug

ANTI-LOCK SHIELD/HIGH MOISTURE SEAL

Luff has engineered and designed a polymer disc that seats inside the end cap, remaining stationary as the roller rotates around it. This allows the roller to turn freely, even with material built up between the roller end and the idler frame.

Spillage from conveyor belts can result in the roller jamming, if excess material falls between the roller and frame endplate the roller will jam and wear a flat spot or a hole which could eventually tear the belt.

FEATURES

- Reduces or eliminates rollers seizing due to excess debris or material spillage
- Reduces maintenance costs and downtime
- Acts as a deflection shield against direct moisture pressure
- Manufactured using durable polymers
- Easily installed in the field
- Available in 4", 5", 6" and 7" diameters
- Available on steel and impact rollers

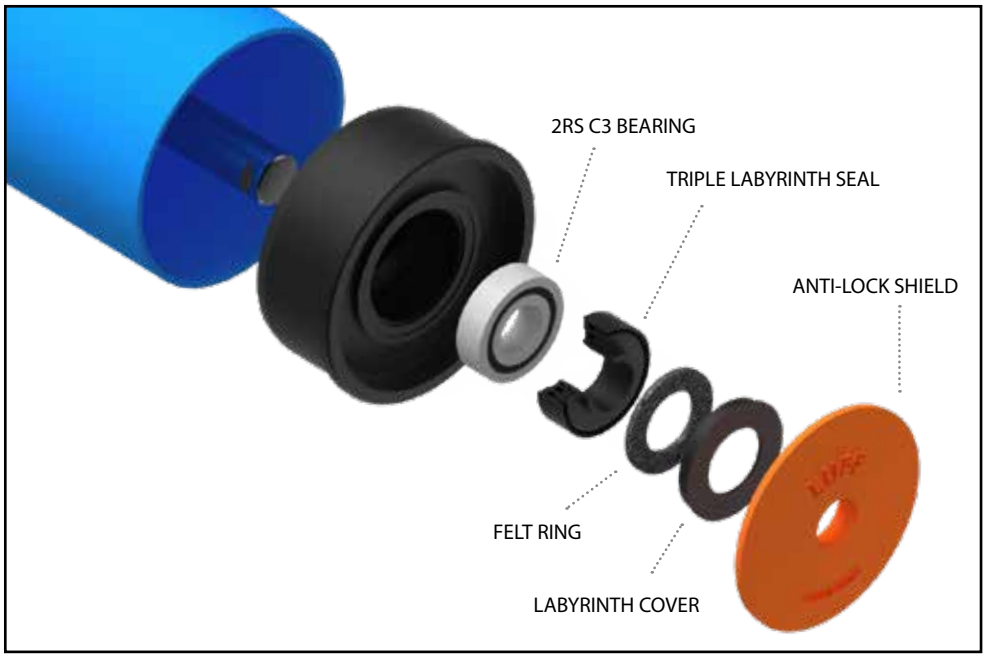

Luff polymer products, including the end cap and polymer disc are safe to operate in temperatures ranging from -45°C to 90°C (-49°F to 194°F).

Luff rollers with the Anti-lock Shield and High Moisture Seal will decrease maintenance costs and increase efficiency by doubling the life of your rollers in troublesome applications.

HIGH MOISTURE SEAL OPTION

The HMS equipped rollers feature a grease packed cavity behind the shield that acts as a barrier for any moisture or contaminants that may get behind the disc. The combination of the patented end cap design with a triple labyrinth seal and the polymer disc has created unmatched sealing protection.

The perfect solution for environments with high humidity or excessive moisture and areas with potential for fine particle contamination.

SPECS

PART #	DESCRIPTION
SAL4	4" DIA. ANTI-LOCK SHIELD
SAL5	5" DIA. ANTI-LOCK SHIELD
SAL 6	6" DIA. ANTI-LOCK SHIELD
HMS-2	HIGH MOISTURE SEAL TWO ENDS
HMS-6	HIGH MOISTURE SEAL ALL SIX ENDS
SAL-2	ANTI-LOCK SHIELD TWO ENDS
SAL-6	ANTI-LOCK SHIELD ALL SIX ENDS

RETROFITS

0.9375" HEX – NO SHOULDER

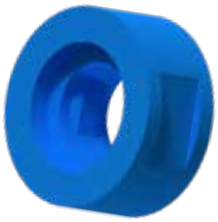

PIONEER

1.25" HEX – NO SHOULDER

1.125" HEX/1.250" HEX

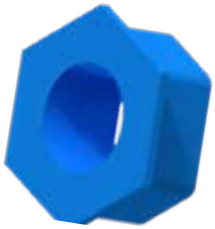

FORANO

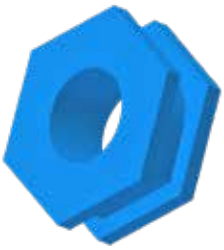

2" HEX (HEX/ROUND)

2" HEX with LOCKING TAB

RETROFIT IT

Luff Industries is able to retrofit any style of steel or impact idler

Luff has a full line of adapters available. We can retrofit your existing frame, no matter what style you currently use. These retrofits offer convenient adaptability when moving to Luff's high quality line of products.

CUSTOM ADAPTERS

Custom adapters available for any application. Call for information.

Toll-Free: 1-888-349-LUFF (5833)

STAINLESS STEEL PRODUCTS

Luff Industries' stainless steel products are ideal for corrosive or magnetic applications. Stainless steel products can be found in several material handling industries including, ship-loading, salt mines, sewage treatment plants and food processing facilities.

Stainless Steel is perfect for magnetic applications as the rollers do not interfere with the magnetic field.

PRODUCTS AVAILABLE

- Complete Idlers
- Drum/Wing Pulleys
- Magnetic Drum Pulleys
- Complete Rolls
- HDPE or Composite Rolls with stainless steel shafts
- Idler Frames
- Take up Frames

Grade 304 or 316 steel available

PULLEY PART NUMBER GUIDE

EXAMPLE PART NUMBER: 30-XT80-63-CFD-MDB

30	–	XT80	–	63	–	CF	–	D	–	MDB
PULLEY DIAMETER		HUB SIZE		PULLEY FACE WIDTH*						

HUB SIZE

XT
SK (QD)
SF (QD)
E (QD)
PL106 x bushing bore (Keyless)
PL115 x bushing bore (Keyless)
PL112 x bushing bore (Keyless)
PL400 x bushing bore (Keyless)

*Pulley Face Width:
18" - 42" Belt = Belt Width + 2"
48" - 84" Belt = Belt Width + 3"

FACE TYPE	
CF	Crown Face
FF	Flat Face
DCF	Double Crowned Face

TYPE OF PULLEY	
D	Drum
W	Wing

OPTIONS	
MD	Mine Duty
EC	Engineered Class
S	Spiral
E	Elevator
B	Balanced (Static)
AR	High Abrasion (AR400)
SS	Stainless Steel
SS SO	Stainless Steel Shell Only
GB	Grouser Bar
D	Deflection Wheel
Helix	Helix
Mag	Magnetic Drum
V Groove	V Groove

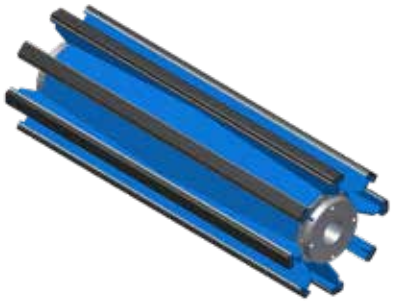

DRUM AND WING PULLEYS

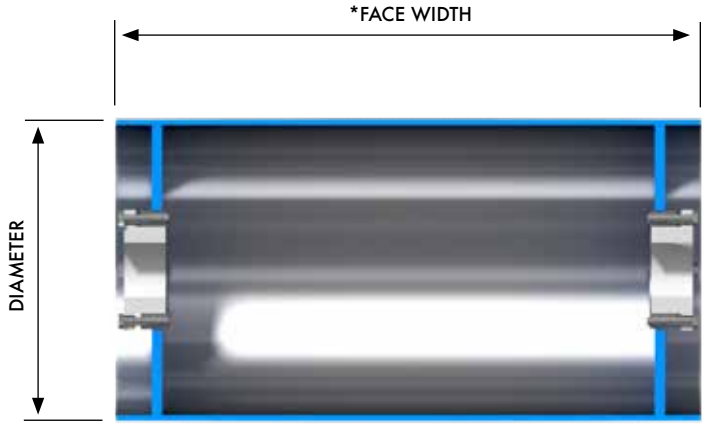

TRAPEZOIDAL CROWN

Luff pulleys feature a trapezoidal crown design, providing superior belt tracking capabilities, while reducing belt wear

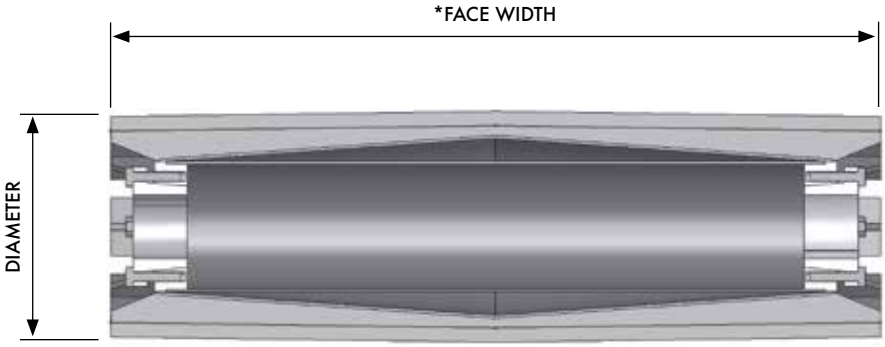

NOTE:

All wing pulleys 16" dia. and greater come complete with reinforcing ring.

All mine-duty pulleys come equipped with reinforcing ring.

KEYLESS LOCKING
ASSEMBLY Available

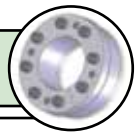

XT®/QD®/KEYLESS STYLE PULLEYS

- Fabricated to CEMA standards for welded steel conveyor pulleys

Mine Duty Available	ISO 9001	Engineered Class Available

- All pulleys are jig welded and machined to Luff's strict quality standards, along with I.S.O. (International Standards of Quality)
- Fully assembled when bushings and shaft are ordered
- Mine duty and engineered class pulleys available upon request
- Drum pulleys can be statically or dynamically balanced upon request
- All drum pulleys manufactured using heavy wall pipe

SPECS

XT STYLE		QD STYLE	
HUB SIZE	MAX BORE SIZE	HUB SIZE	MAX BORE SIZE
XT15	1.4375"	SDS	1.9375"
XT20	1.9375"	SK	2.188"
XT25	2.4375"	SF	2.4375"
XT30	2.9375"	E	2.9375"
XT35	3.4375"	F	3.4375"
XT40	3.9375"	J	3.9375"
XT45	4.4375"	M	4.9375"
XT50	4.9375"	N	5.063"
XT60	6.00"	P	5.813"
XT70	7.00"	W	6.00"
XT80	8.00"	S	6.00"
XT100	10.00"	-	-
XT120	12.00"	-	-

SPIRAL DRUM AND WING PULLEYS

SPIRAL PULLEYS

SPIRAL DRUM PULLEY

The Spiral Drum Pulley is formed by a pair of steel bars helically wound around the drum pulley. These bars converge at the center of the pulley and spiral out towards both ends at a 3-inch pitch. This design ensures constant contact with the belt, reducing the possibility of material build-up between the belt and pulley face.

The cleaning action of the Spiral Drum Pulley is extremely effective in high tension or high speed applications, where a wing pulley cannot be used.

Spiral Drums can be made with XT®, QD®, Taper Lock®, or Keyless Locking Assemblies (KLA), available in Crown or Flat Face. AR high abrasion contact bars available.

Self-Cleaning	**XT®, QD®, Taper Lock, Keyless**	**AR High Abrasion Spiral Wrap Available**

SPIRAL WING PULLEY

The Spiral Wing Pulley is formed by a pair of flat steel bars helically wound around a wing pulley. The bars converge at the center of the pulley, spiraling out towards both ends at a 3-inch pitch, ensuring constant contact with the belt. This contact eliminates excessive noise and vibration sometimes found in standard wing pulley designs.

Rotation of the pulley automatically starts the self-cleaning action, discharging foreign material to the sides of the conveyor.

Spiral Wings can be made with XT®, QD®, Taper Lock®, or Keyless Locking Assemblies (KLA). Available in Crown or Flat Face and can be produced with AR wrap.

WEAR WOLF WING PULLEYS

Luff Wear Wolf is the industry solution when operating in high wear applications.

AR Plate or Hard Surface Welds have been used in the past, which wears much faster and can lead to prestress on the welds and catastrophic pulley failure.

Luff's proprietary material blend boasts wear properties 4 times better than AR Plate & outlasted hard surfacing by 2-3 times, without losing ductile properties.

AR PLATE	43 ROCKWELL C
HARD SURFACE WELDING	57 ROCKWELL C
WEAR WOLF BLEND	**66 ROCKWELL C**

HELIX PULLEYS

HELIX DESIGN

Luff's Helix design offers stronger pulley construction while maintaining constant belt contact, resulting in reduced vibration and less wear on the conveyor belt.

Standard duty, mine duty and engineered class available. Call for details, toll-free: **1-888-349-LUFF (5833)**

BUCKET ELEVATOR PULLEYS

Luff's Bucket Elevator Pulleys are manufactured with heavy schedule pipe, allowing for improved performance and longer life. A large machined trapezoidal crown angle provides superior belt tracking and ensures maximum pulley concentricity, even at high speeds.

Available with a variety of lagging options.

Wing and Helix Pulleys also available.

MAGNETIC PULLEYS

Luff's Magnetic Pulley shell is made of stainless steel and the core is constructed from powerful, non-deteriorating magnetic ceramic blocks that produce a strong magnetic field. The primary function of a magnetic pulley is the extraction and separation of tramp iron and similar metals from the non-magnetic material being conveyed.
Removing metals from material can help protect equipment like crushers, grinders, shredders, pulverizers and other valuable machinery.

Available in any diameter or face width required the pulley can be custom manufactured to the requirements of your application.

Mounted on a high tensile steel shaft and keyed to the customers drive requirements, the Magnetic Drum Pulley is available in QD, XT, or Keyless hub styles.

SAWMILL PULLEYS

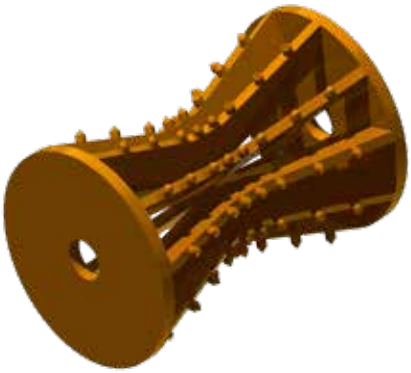

Pulleys specifcially designed to increase the performance of sawmill operations.

- Feed Rolls
- High Sped Balanced Drums
- Centering Roll
- Spiker Drums/De-Barker Roll

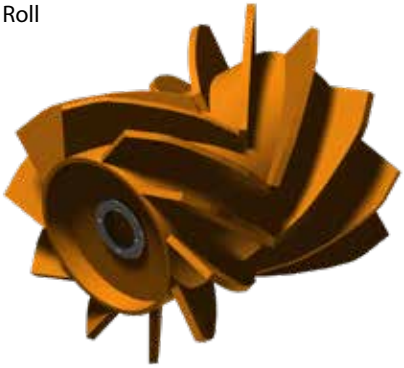

PULLEY LAGGING

LAGGING

50/60 durometer, shore A SBR rubber lagging is bonded directly to the pulley rim. Chevron, Herringbone and Diamond Groove are all available. Rubber lagging with a smooth finish can also be supplied. If grooving is required, direction of rotation is required.

Also Available: Neoprene, Nitrile, Urethane, Roughtop, and Ceramic.

DIAMOND LAGGING

Richwood Redi-Lagg

Richwood Redi-Lagg is available in a full line of rubber weld-on lagging and ceramic weld-on lagging to cover most applications.

Redi-Lagg-R has an aggressive tread pattern, providing a superior belt gripping power and longer service life.

Redi-Lagg-C is made with the same industry leading technology used in Richwood Combi-Lagg ceramic lagging, providing 4 times longer wear than rubber lagging.

Available in lengths up to 72" long and 1/2" and 3/4" thickness.

Standard SBR and anti-static, oil resistant and fire retardant rubber blends available.

REDI-LAGG

MultoLag Direct Bond Ceramic Lagging

Ceramic tiles are bonded directly to steel surface using patented MultoLag high tensile flexible bonding system. The bondng system offers installed shear strength of >25 MPa. The tiles do not wear, reducing downtime and operating costs.

Drive pulleys use high density ceramic tiles with studs to maintain maximum traction in all conditions. The studs have rounded edges to prevent belt wear and dewatering grooves help dissipate water and dirt, to maintain belt traction in wet or muddy conditions.

Non-drive ceramic tiles are smooth, reducing friction and wear on both pulley shell and conveyor belt.

DIRECT BOND
CERAMIC LAGGING

Richwood Ceramic Lagging

Luff Industries has partnered with Richwood Molded Rubber Products to provide top of the line ceramic lagging on Luff Drum pulleys.

Combi-Lagg and Combi-Grip lagging uses Richwood R2000LS premium rubber compound and ceramic tiles with raised nubs to provide maximum grip, preventing belt slippage.

Combi-Lagg & Combi-Grip

- Higher Friction Values
- Improved Belt Tracking
- Sheds Water and Dirt
- Easy Installation
- Less Pulley Wear
- Minimize Downtime

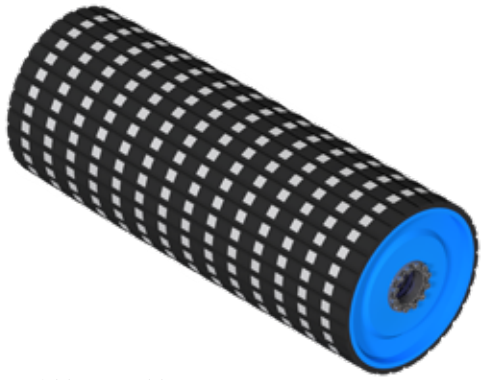

CERAMIC COMBI-GRIP

CERAMIC COMBI-LAGG

WING PULLEY LAGGING

A blend of natural and SBR chemically moulded to a 12-gauge steel channel. Engineered for maximum traction in both directions, allowing Luff Wing Lagging to be utilized on reversing belts.

- Reduce belt and pulley wear
- Can be used on reverse belt conveyors (two directions)
- Decrease downtime
- Reduce maintenance costs
- Prevent spillage
- Fits flat and crowned pulley

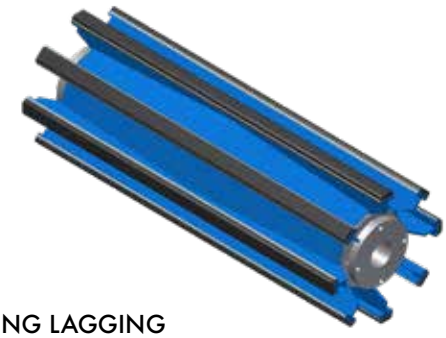

WING LAGGING

LAGGING	
PART #	FLAT BAR
WL-108-32	1.5"
WL-200-32	2"

WING PULLEY LAGGING – NUMBER OF 32" STRIPS REQUIRED FOR SELECTING FACE WIDTHS & DIAMETERS

NO OF FINS	FLAT BAR SIZE	DIA.	NUMBER OF STRIPS FOR SELECTED FACE AND DIAMETERS													
			12	14	16	18	20	22	26	32	38	44	51	57	63	72
8	1"	6	4	4	4	5	5	6	7	8	10	11	14	16	16	18
8	1.5"	8	4	4	4	5	5	6	7	8	10	11	14	16	16	18
8	1.5"	10	4	4	4	5	5	6	7	8	10	11	14	16	16	18
8	1.5"	12	4	4	4	5	5	6	7	8	10	11	14	16	16	18
10	1.5"	14	4	5	5	6	7	8	9	10	12	14	16	20	20	23
10	1.5"*	16	4	5	5	6	7	8	9	10	12	14	16	20	20	23
12	1.5"*	18	5	6	6	7	8	8	11	12	15	17	20	23	24	27
12	2"	20	5	6	6	7	8	8	11	12	15	17	20	23	24	27
14	2"	24	6	7	7	8	10	10	12	14	17	20	24	28	28	32
18	2"	30	7	8	9	11	12	13	15	18	22	25	28	34	34	38
18	2"	36	7	8	9	11	12	13	15	18	22	25	28	34	34	38
20	2"	42	8	9	10	12	13	14	17	20	24	27	32	36	38	43
22	2"	48	9	10	11	13	15	15	18	22	26	30	34	42	42	47

* Mine Duty Wing Pulleys Use FB (Flat Bar) Size 2"

DODGE DRIVE PACKAGES

ABB/DODGE DRIVE PACKAGES ARE AVAILABLE FOR ALL LUFF PULLEYS.

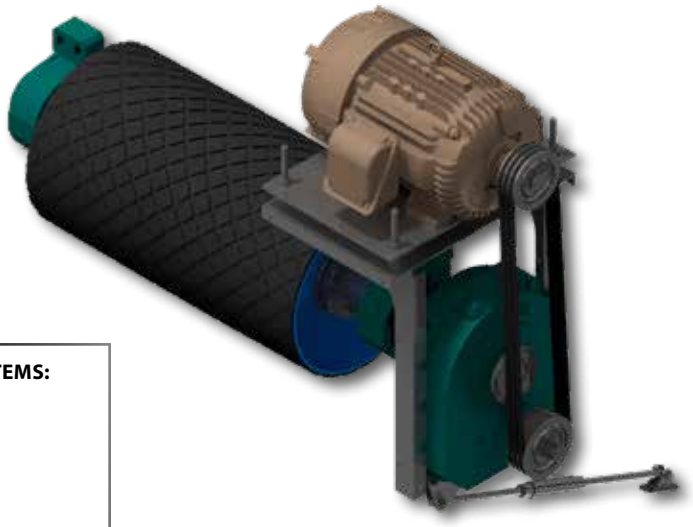

FEATURES

PACKAGES COME COMPLETE WITH THE FOLLOWING ITEMS:

- Drum Pulley with bearings
- Reducer
- Bushing Kit
- Rod Assembly
- Motor mount with crusher duty motor
- Dodge Sheaves

BELT BRUSH CLEANING UNIT

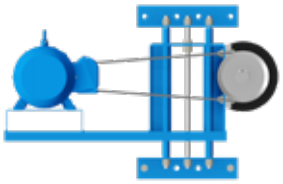

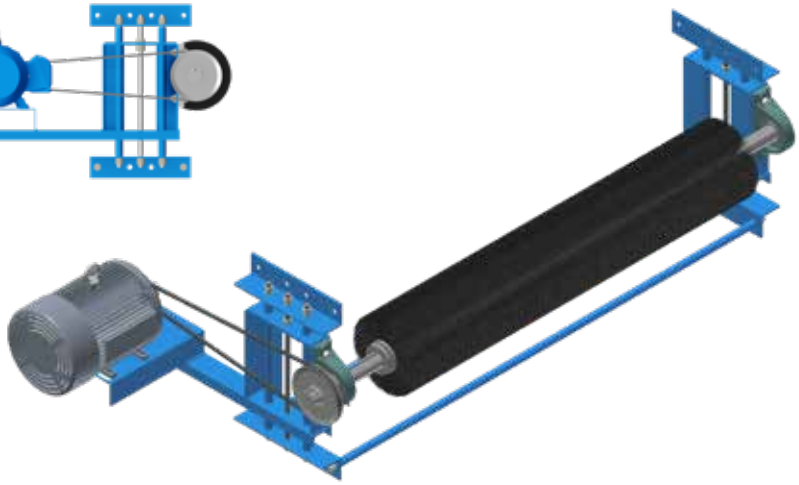

Shown with guard removed

IMPROVE TRACKING
Cleaning your conveyor belt helps with belt tracking by reducing carryback build up on rollers.

ELECTRIC MOTOR
Driven by its own electric motor, the brush turns opposite to the direction of belt travel, delivering a positive cleaning action.

CUSTOMIZE
Luff can custom build the unit, providing ultimate performance specifically suited to your needs.

FEATURES

- Take-up style rod assembly provides easy brush adjustment
- Hanger brackets mount directly on the conveyor frame for easy installation

1,200 rpm Motor	10" Dia. Brush	Easy Installation	Pillow Block Bearings

- Standard length shafts are available, or shafts can be supplied extra-long for field installation
- Pillow block bearings for dependable, friction-free drive (lubricated periodically)
- TEFC 1,200 rpm motor. 60 cycle, three phase, 230/460-volts. Explosion proof & 575-volt available
- Brush speed can be adjusted independently of belt speed (brush speed is typically 2–3 times faster than the conveyor speed)
- Standard 10-inch diameter brush, with 3-inch bristles, is the finest quality brush available on the market today. Other brush diameters and bristle lengths available upon request
- Cross members provide strength and stability to the cleaning unit. Available extra-long for field installation
- Belt guard supplied as standard equipment

IMPACT BED

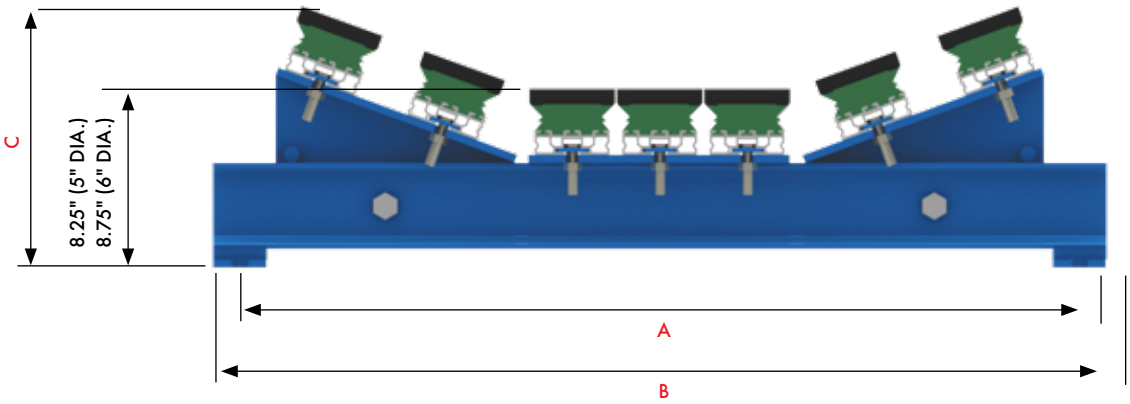

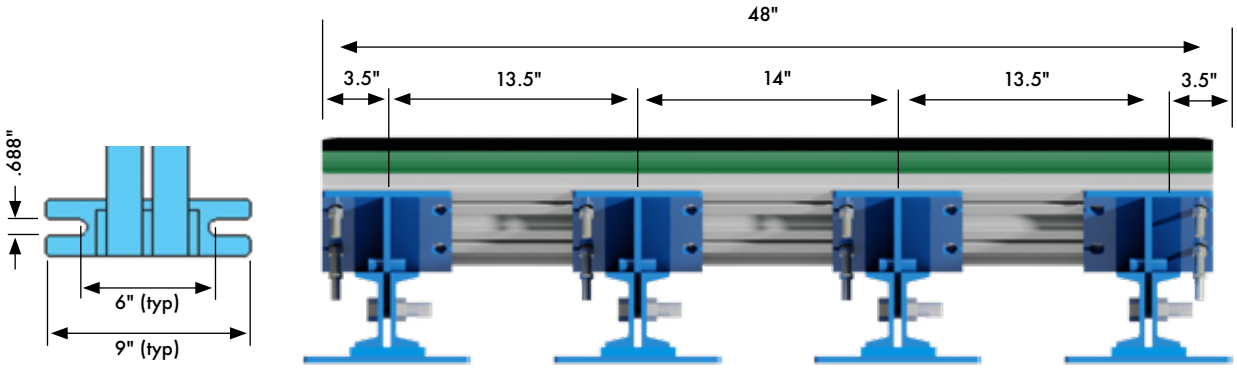

STANDARD LENGTHS AVAILABLE: 48", 60", 72" | CUSTOM & LOW PROFILE DESIGNS AVAILABLE

IMPACT BEDS

Luff's Impact Bars are made of a high performance urethane material, specifically formulated to absorb and disperse the forces of impact. The kinetic energy produced by the impact of material is not amplified and returned as with standard impact bars. This prevents damage and premature wear to the belt surface.

New and improved design features stronger aluminum channels and reduced rebound.

Available in standard lengths of 48", 60", and 72". All bars come standard with a heavy-duty extruded aluminum insert, which provides wear bar rigidity and is designed to accept a standard 1/2" grade 5-bolt & washer.

Impact beds feature two slide-out sections, allowing for easy removal and replacement of impact bars.

5" DIAMETER

				PART #	
BELT	A	B	C (20°)	C (35°)	20° ANGLE	35° ANGLE
18"	27"	29.5"	11"	12.875"	18-254-HDIB-48	18-354-HDIB-48
24"	33"	35.5"	11.5"	13.4375"	24-254-HDIB-48	24-354-HDIB-48
30"	39"	41.5"	12.063"	14.3125"	30-254-HDIB-48	30-354-HDIB-48
36"	45"	47.5"	12.875"	15.75"	36-254-HDIB-48	36-354-HDIB-48
42"	51"	53.5"	13.562"	16.813"	42-254-HDIB-48	42-354-HDIB-48
48"	57"	59.5"	14.25"	18.063"	48-254-HDIB-48	48-354-HDIB-48
54"	63"	65.5"	14.9375"	19.188"	54-254-HDIB-48	54-354-HDIB-48
60"	69"	71.5"	15.562"	20.313"	60-254-HDIB-48	60-354-HDIB-48
72"	81"	83.5"	16.875"	22.562"	72-254-HDIB-48	72-354-HDIB-48

6" DIAMETER

				PART #	
BELT	A	B	C (20°)	C (35°)	20° ANGLE	35° ANGLE
18"	27"	29.5"	11.5"	13.375"	18-264-HDIB-48	18-364-HDIB-48
24"	33"	35.5"	12"	13.9375"	24-264-HDIB-48	24-364-HDIB-48
30"	39"	41.5"	12.562"	14.813"	30-264-HDIB-48	30-364-HDIB-48
36"	45"	47.5"	13.375"	16.25"	36-264-HDIB-48	36-364-HDIB-48
42"	51"	53.5"	14.063"	17.313"	42-264-HDIB-48	42-364-HDIB-48
48"	57"	59.5"	14.75"	18.562"	48-264-HDIB-48	48-364-HDIB-48
54"	63"	65.5"	15.4375"	19.688"	54-264-HDIB-48	54-364-HDIB-48
60"	69"	71.5"	16.063"	20.813"	60-264-HDIB-48	60-364-HDIB-48
72"	81"	83.5"	17.375"	23.063"	72-264-HDIB-48	72-364-HDIB-48

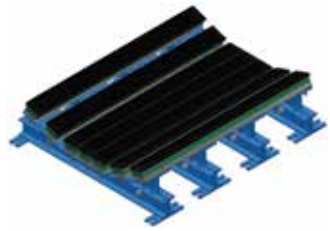

SLIDER & IMPACT SLIDER BED

SLIDER BED

IMPACT SLIDER

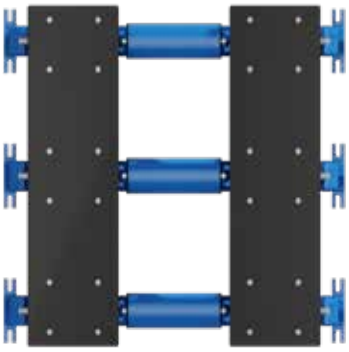

SLIDER BED TOP VIEW

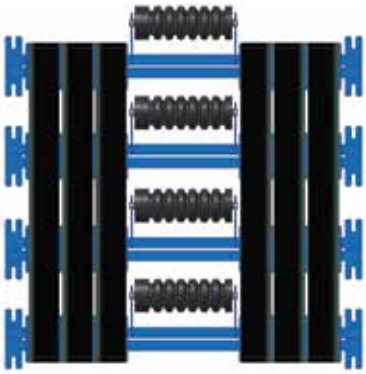

IMPACT SLIDER TOP VIEW

SLIDER BED FRONT VIEW

IMPACT SLIDER FRONT VIEW

SLIDER BED SIDE VIEW

IMPACT SLIDER SIDE VIEW

FEATURES

- Available in CEMA B, C, D, E and F load ratings
- Constructed for ultimate strength and durability. Perfect for medium–heavy duty applications

CEMA B, C, D, E & F	Custom Design	HD	Reduces Friction

- Optimal design for sealing with skirting, eliminating spillage
- Maximizes skirting life
- Center rollers reduce friction allowing the belt to roll freely, minimizing heat build-up and wear
- All beds manufactured to standard CEMA bolting and height dimensions
- On site engineering team will custom design the Slider Bed to meet your specific needs for quick and easy in-field installation

HEAVYDUTY HD

THE RETRO-PROTECTOR RETURN ROLLER GUARD

QUICK RELEASE PIN
Quick-release pin allows for removal of guard panels, providing easy cleaning and maintenance.

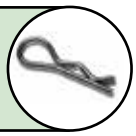

MEETS CSA/MSHA/OSHA SPECIFICATIONS

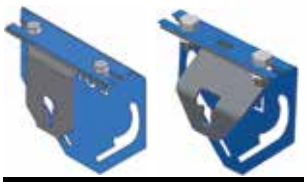

EASILY RETROFIT TO EXISTING ROLLER BRACKETS

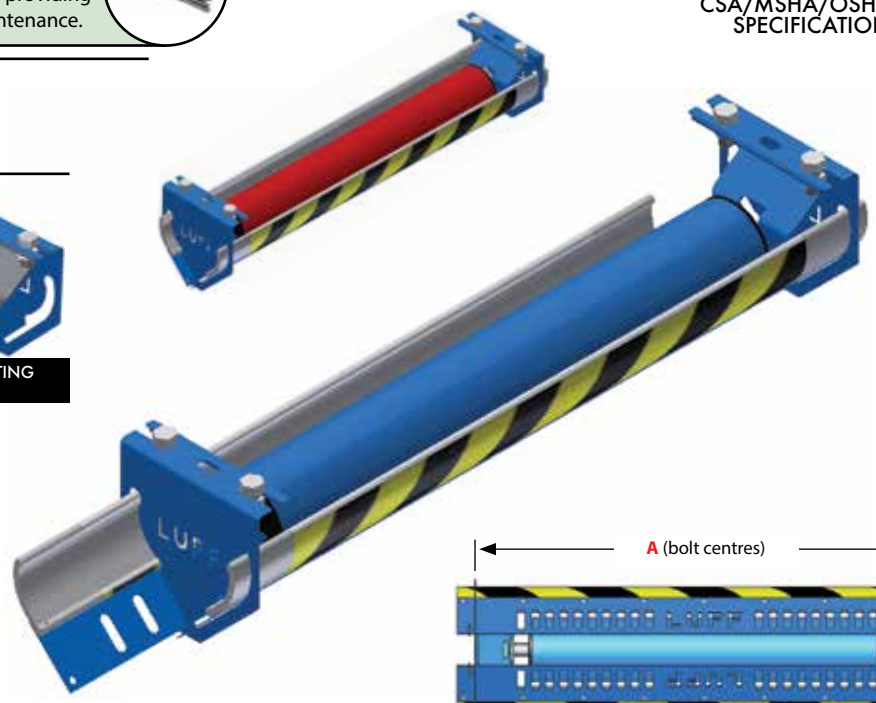

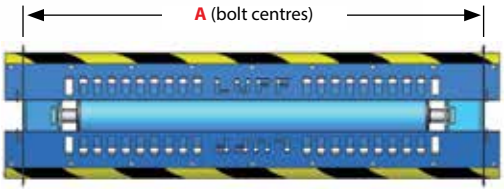

The Protector is designed to help minimize the potential for injury. Owner/operator should always follow safe work procedures and never make adjustments to moving components

FEATURES

- Quick-Release guard panels provide convenient access to the idler for maintenance and cleaning
- Retrofit your existing return roller, using a competitor's brackets
- Available with steel or self cleaning rubber disc return rollers
- Optional Anti-Lock Shield on steel return rollers

Quick-Release Guard Panels	Steel or Rubber Disc	Easy to Clean

- Acts as a basket to catch roller in the event of idler failure
- Composite leading edge protects belt from wear abrasion
- Protects the user by eliminating pinch points
- Luff slide panels make The Protector virtually maintenance free
- Custom designs available
- Meets MSHA, OSHA & CSA specifications

BELT WIDTH	A	PART #
18″	27″	RRP-18-4/5/6
24″	33″	RRP-24-4/5/6
30″	39″	RRP-30-4/5/6
36″	45″	RRP-36-4/5/6
42″	51″	RRP-42-4/5/6
48″	57″	RRP-48-4/5/6
54″	63″	RRP-54-4/5/6
60″	69″	RRP-60-4/5/6
66″	75″	RRP-66-4/5/6
72″	81″	RRP-72-4/5/6
84″	93″	RRP-84-4/5/6
96″	105″	RRP-96-4/5/6

CHOOSE DIAMETER: 4", 5", OR 6"

RETURN ROLLER GUARD

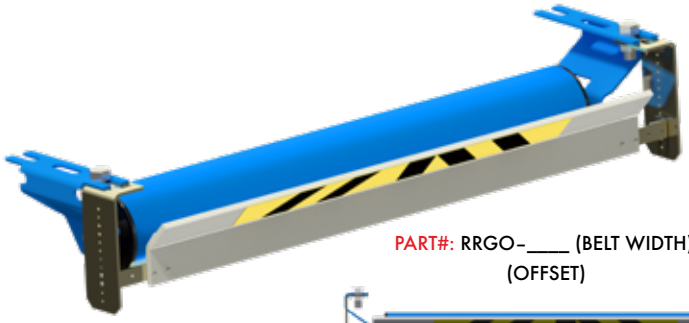

FEATURES

- Eliminates all pinch points between belt and return roller
- Available for all sizes in straight drop or belt saver offset design

PART#: RRGO-____ (BELT WIDTH) (OFFSET)

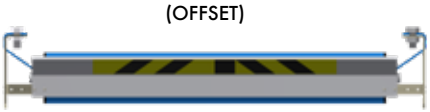

PART#: RRG-____ (BELT WIDTH) (STRAIGHT)

SAFETY NET

LUFF SAFETY NET PROVIDES A FLEXIBLE AND SAFE GUARDING SOLUTION

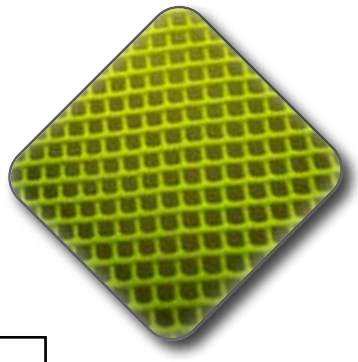

FEATURES

- Made of HDPE for a strong, non-conducting barrier.
- Easily cut into any size or shape to fit your conveyor system.
- High-visibility safety yellow for easy detection of hazardous areas.

Mesh Size: 2mm x 2mm	Roll Length: 4" wide x 100' long

- Guard panels are UV resistant and maintain stability up to 100 ºC to ensure maximum durability in various environments.
- HDPE material is Food Grade
- All panels come complete with TEK self-drilling screws and driver for attaching to machinery.

BELT CLEANER

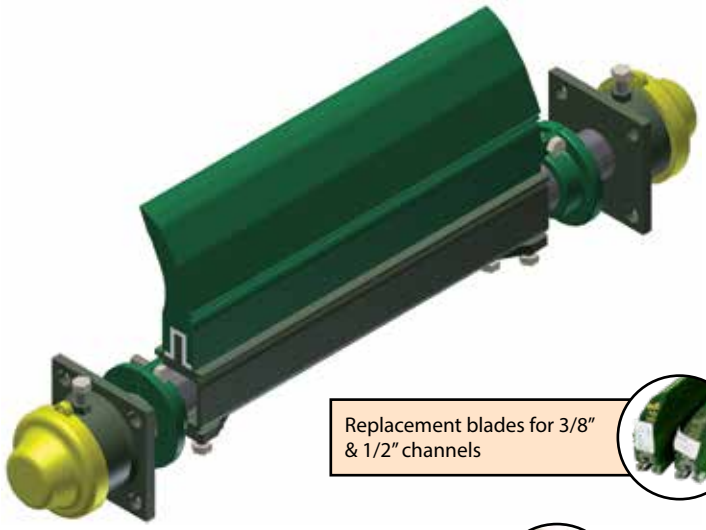

Replacement blades for 3/8" & 1/2" channels

Available for any application from **OEM to Heavy Mining**

FEATURES

- Designed to efficiently clean the conveyor belt
- Removes debris build-up, increasing performance of conveyor
- Versatile, lightweight design allows for quick and easy installation in various belt configurations
- Light weight allows for installation in tight locations
- Bolts are .75" reducing the need for multiple tools
- Economical with long blade life
- Minimal maintenance required
- Can be used on reversing belts
- Simple blade change for quick maintenance
- Many sizes and styles in stock

Other urethane products available including crown bar and skirting. Call for more information: **1-888-349-LUFF (5833)**

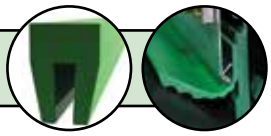

REGULAR DUTY TOP MOUNT TAKE-UP FRAME

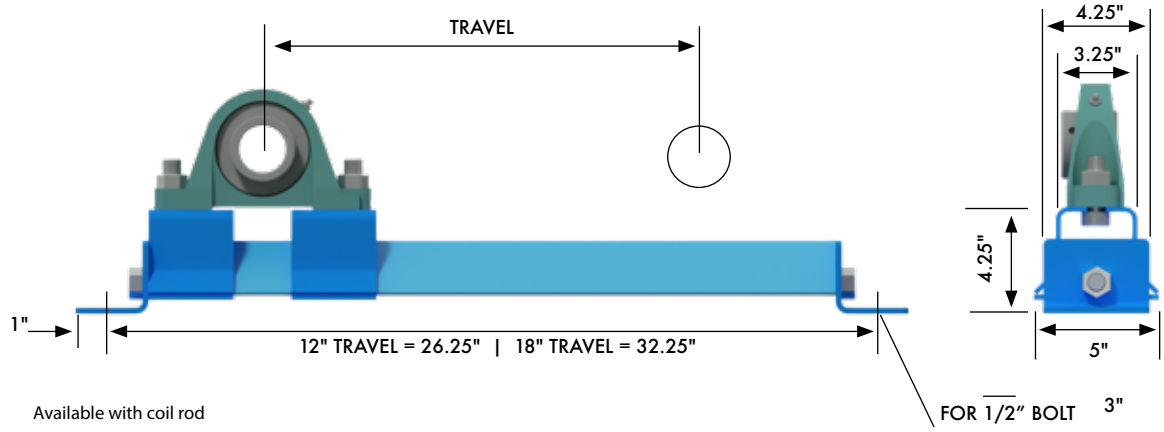

Available with coil rod

12" & 18" TRAVEL IN STOCK/CUSTOM SIZES AVAILABLE

Bearings not included with Take-up Frames

SPECS

SHAFT SIZE	PART #
1.188"	PBLD-103-TRAVEL
1.4375"	PBLD-107-TRAVEL
1.9375"	PBLD-115-TRAVEL
2.188"	PBLD-203-TRAVEL
2.4375"	PBLD-207-TRAVEL
2.9375"	PBLD-215-TRAVEL

HEAVY DUTY HD TOP MOUNT TAKE-UP FRAME

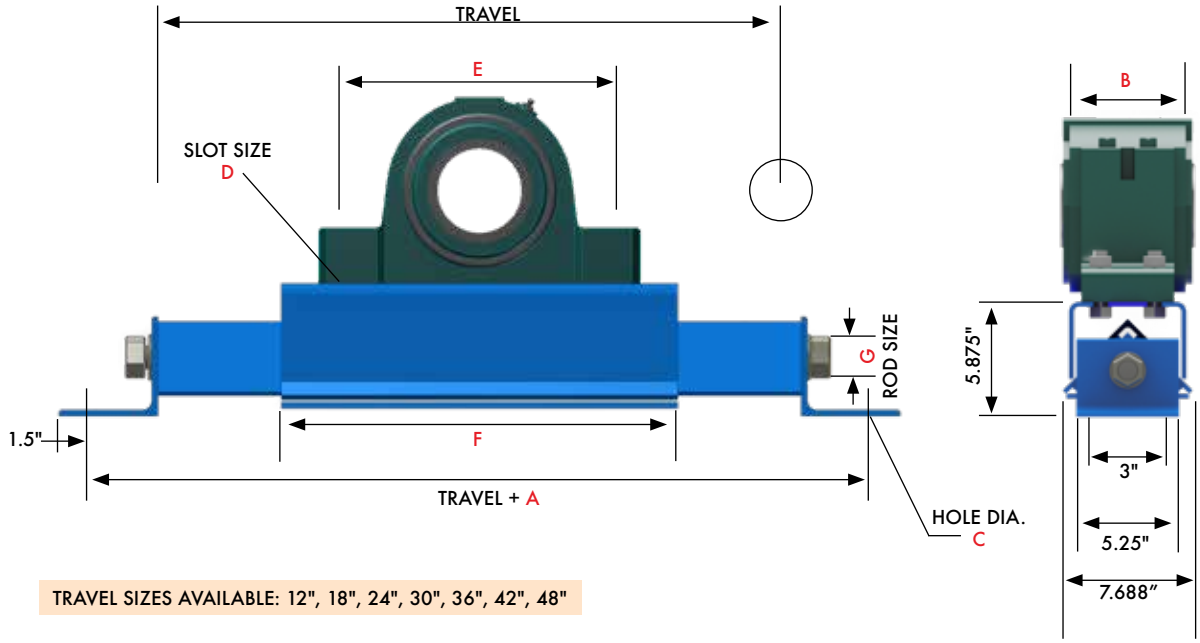

TRAVEL SIZES AVAILABLE: 12", 18", 24", 30", 36", 42", 48"

Comes standard with ACMEROD

SPECS

SHAFT SIZE	A	B	C	D	E	F	G	PART #
1.437"	14"	4"	0.81"	0.562"	6.625"	9"	1"	PSHD-107-TRAVEL
1.9375"	16"	4"	0.81"	0.688"	8.25"	11"	1"	PSHD-115-TRAVEL
2.188"	17"	4.75"	0.81"	0.75"	9"	12"	1"	PSHD-203-TRAVEL
2.4375	17"	4.75"	0.81"	0.75"	9"	12"	1"	PSHD-207-TRAVEL
2.9375"	19"	5"	0.9375"	0.875"	10.25"	14"	1.25"	PSHD-215-TRAVEL
3.4375"	21"	6"	0.9375"	1"	12.625"	16"	1.25"	PSHD-307-TRAVEL
3.9375"	22.5"	6"	0.9375"	0.875"	13.5"	17.5"	1.25"	PSHD-315-TRAVEL
4.4375"	24"	6"	0.9375"	1	15.375"	19"	1.25"	PSHD-407-TRAVEL
4.9375"	26"	7"	0.9375"	1.25"	16.5"	21"	1.25"	PSHD-415-TRAVEL

- **PSXHD (EXTRA HEAVY DUTY) & PSHD LP (HEAVY DUTY LOW PROFILE) TAKE-UP ALSO AVAILABLE**
- **2 or 4 BOLT OPTION AVAILABLE**

SLOTTED SIDE MOUNT TAKE-UP FRAME

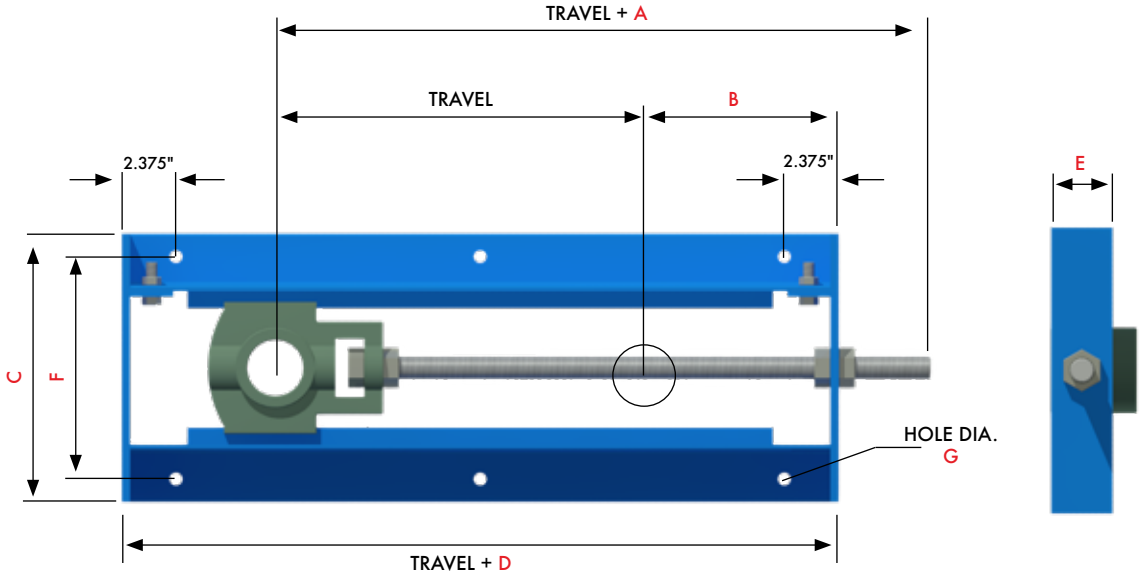

TRAVEL SIZES AVAILABLE: 12", 18", 24", 30", 36", 42", 48" | STANDARD NARROW SLOT BEARING

SPECS

								TU-SSM
SHAFT SIZE	A	B	C	D	E	F	G	PART #
1.188″	1.9375″	5.625″	8.4375″	11.75″	2″	6.4375″	0.4375″	LTU-103-TRAVEL
1.4375″	7.9375″	5.875″	8.4375″	11.75″	2″	6.4375″	0.4375″	LTU-107-TRAVEL
1.9375″	8.25″	6.625″	10.375″	13.25″	2.5″	8.375″	0.4375″	LTU-115-TRAVEL
2.188″	9.75″	6.625″	11.688″	13.25″	2.5″	9.688″	0.562″	LTU-203-TRAVEL
2.4375″	10″	6.625″	11.688″	13.25″	2.5″	9.688″	0.562″	LTU-207-TRAVEL
2.9375″	11.562″	7.875″	14″	15.75″	3″	11″	0.562″	LTU-215-TRAVEL
3.4375″	12.75″	9.4375″	17.5″	18.9375″	3″	14.5″	0.688″	LTU-307-TRAVEL
3.9375″	14″	10.125″	18.3125″	20.25″	3″	15.3125″	0.688	LTU-315-TRAVEL

TELE-TAKE TELESCOPIC TAKE-UP

GREASE COUPLING
provides quick and easy lubrication of internal parts

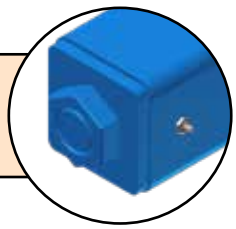

ACME ROD

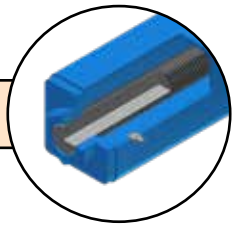

- Adjust belt tension with ease
- Coil Rod
- Perfect for aggregate applications
- Bearing Mount Plate accepts bolt hole centres from 6.25" min to 8.5" max
- Unit accepts bearings from 1.9375" (1-15/16") to 2.9375" (2-15/16")
- Inline bearing mounting available

Accepts 6.25" Min to 8.5" Max Big Bolt Hole Centres

SPECS

PART #
TT-BRG-TRAVEL
TT-BRG-TRAVEL
TT-BRG-TRAVEL
TT-BRG-TRAVEL

E.G.,: TT-115-12
BRG
TRAVEL

GUIDE ROLLERS

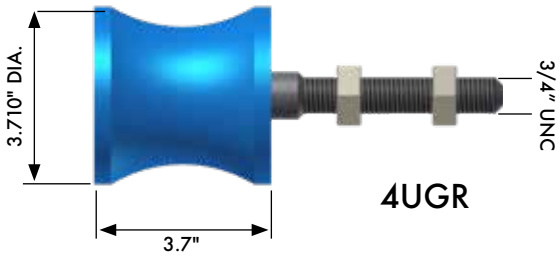

4UGR

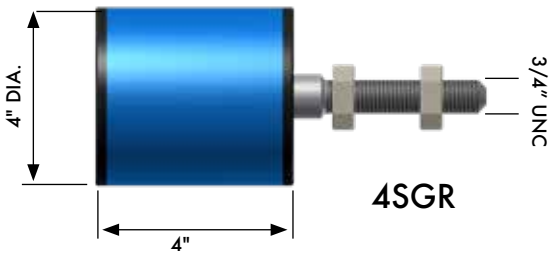

4SGR

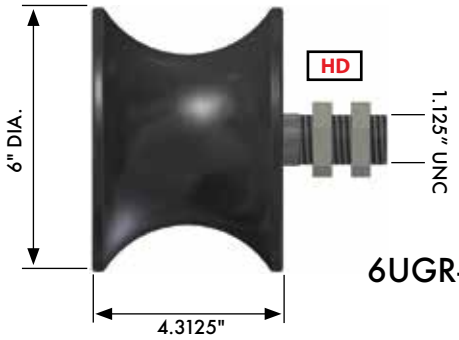

6UGR-E

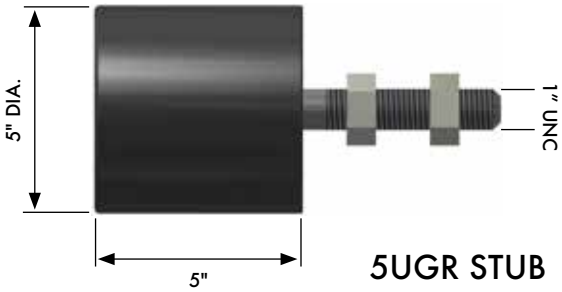

5UGR STUB

2SGR

FEATURES

4UGR GUIDE ROLLERS

Luff's polyurethane guide roller is designed to control belt alignment without causing damage to the belt as found in some steel guide idler applications. The unique design of the 4UGR ensures long life and stability through even the harshest conditions.

6205 Sealed Ball Bearings	Concave Design	Polyurethane Shell

- Contains two 6205 sealed ball bearings with a Luff triple labyrinth seal for added protection
- Injection-moulded shell from high quality, wear-resistant, thermoplastic polyurethane
- Full length threading for unlimited height adjustment
- Concave design is superior to flat steel guide rollers as it helps force the belt back down onto the idler rolls

6UGR-E GUIDE ROLLERS

- Built specifically for heavy belt conveyor applications including mining, ship loading and aggregate
- Made of composite urethane material, providing improved strength, durability and corrosion resistance over conventional steel guide rollers

6306 Sealed Ball Bearings	Urethane	2-Year Warranty

- Hourglass shape offers the ultimate in belt control, by preventing the belt from climbing the guide roller
- Consists of oversized machined shaft, two 6306 2RS C3 sealed ball bearings, Luff's patented SAE triple labyrinth sealing arrangement
- 1.125" NC threaded shaft for easy installation
- Built to last and backed by Luff's full 2-year warranty
- Various designs and profiles available, depending on application

SPECS

PART #	DESCRIPTION
TROUGH SIDE	
4UGR	4" URETHANE GUIDE ROLLER
4UGRB	4" URETHANE GUIDE ROLLER & BRACKET
4SGR	4" STEEL GUIDE ROLLER
4SGB	WELD-ON GUIDE ROLLER BRACKET ONLY
4SGRB	4" STEEL GUIDE ROLLER & BRACKET
RETURN SIDE	
2SGR	2" STEEL GUIDE ROLLER
2SGB/SR	BOLT-ON 1.5" DROP SERIRS BRACKET ONLY
S2SGRB/SR	2" STEEL GUIDE ROLLER & BRACKET (2400)
2SGB/HSR	BOLT-ON 4.5" DROP SERIES BRACKET ONLY
2SGRB/HSR	2" GUIDE ROLLER & BRACKET (3400)

PART #	DESCRIPTION
5UGR STUB	5" URETHANE SIDEWALL BELT STUB ROLLER

PART #	DESCRIPTION
6UGR-E	6" URETHANE CEMA E GUIDE ROLLER

ADJUSTABLE BRACKET AVAILABLE

- Allows for the belt to be aggressively tracked.
- Adjustable in two directions

RUBBER DISCS

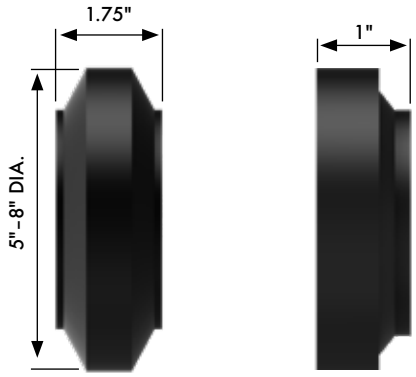

MIDDLE RUBBER END RUBBER

4" DIAMETER DISCS AVAILABLE

SPECS

PART #	DESCRIPTION
MR4-206-100	4" DIA. END RUBBER CEMA C (1" WIDE)
ER5-206-100	5" DIA. END RUBBER CEMA C
MR5-206-175	5" DIA. MIDDLE RUBBER CEMA C
ER5-214-100	5" DIA. END RUBBER CEMA D
MR5-214-175	5" DIA. MIDDLE RUBBER CEMA D
ER6-206-100	6" DIA. END RUBBER CEMA C
MR6-206-175	6" DIA. MIDDLE RUBBER CEMA C
ER6-214-100	6" DIA. END RUBBER CEMA D
MR6-214-175	6" DIA. MIDDLE RUBBER CEMA D
MR7-214-175	7" DIA. MIDDLE RUBBER CEMA E
MR7-414-175	7" DIA. MIDDLE RUBBER CEMA F
MR8-600-175	8" DIA. MIDDLE RUBBER CEMA F

URETHANE DISCS

- Urethane Discs are available in standard belt widths from 18" - 96"
- Recommended for return rollers
- Provides higher resitance to abrasion and longer life than rubber discs

URETHANE DISCS
available

2400/3400/4500 BRACKETS

2400/3400 RETURN

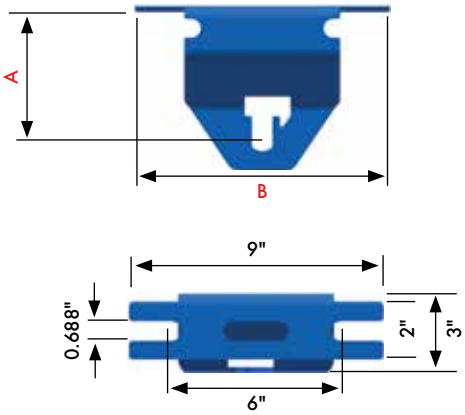

PART #	A	B	WEIGHT
945SR	4.5"	9"	2.6 lbs.

2400/3400 CARRYING

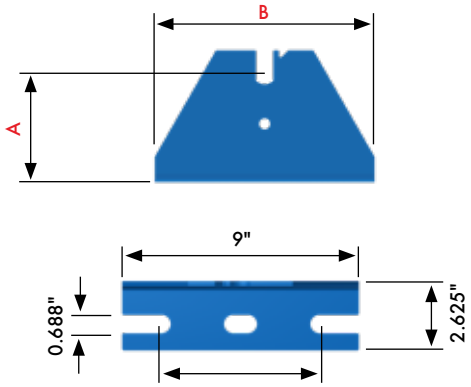

PART #	A	B	WEIGHT
945BPS	4.5"	9"	2.6 lbs.
915BPS	1.5"	9"	1.3 lbs.

2400/3400 RETURN

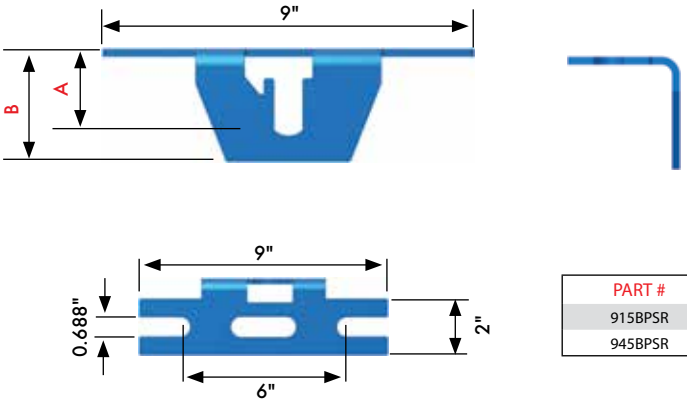

PART #	A	B	WEIGHT
915BPSR	1.5″	2.625″	1.3 lbs.
945BPSR	4.5″	5.5″	1.9 lbs.

2400/3400 RETURN

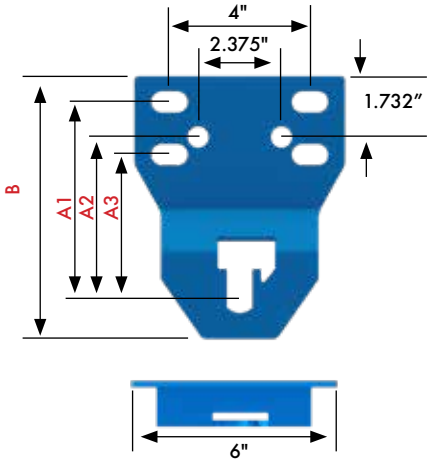

PART #	A1	A2	A3	B	WEIGHT
545CIR	5.5″	4.5″	4″	7.25″	1.4 lbs.

2400/3400 RETURN

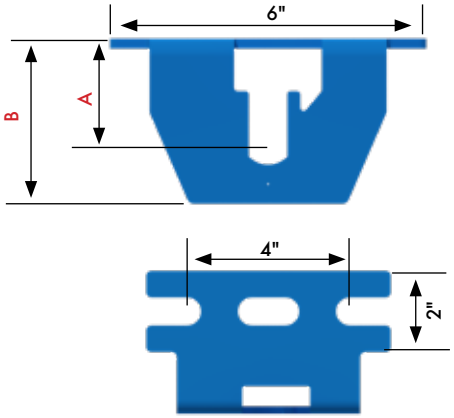

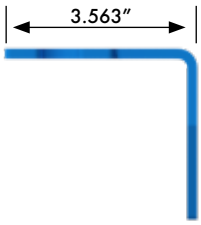

PART #	A	B	WEIGHT
620CIR	2″	2.938″	1.3 lbs.

4500 RETURN

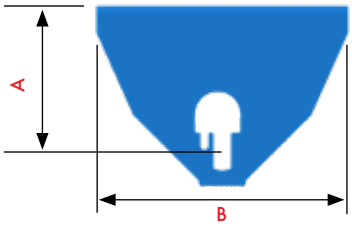

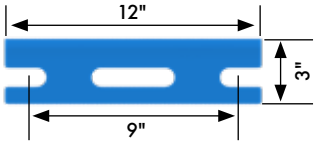

PART #	A	B	WEIGHT
1270BPSR	7″	12″	6.6 lbs.

4500 RETURN

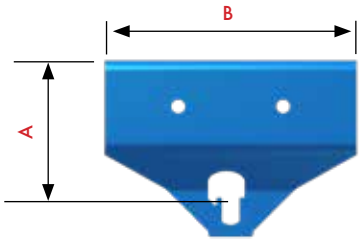

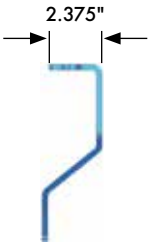

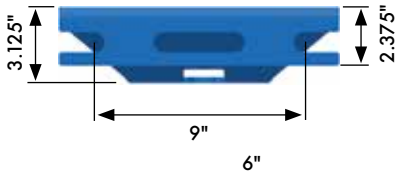

PART #	A	B	WEIGHT
1270SR	7″	12″	8.0 lbs.

ROLLER DATA SHEET

COMPANY:

CONTACT:

PHONE #:

EMAIL:

APPROVED FOR MANUFACTURE BY:

DATE:

SIGNATURE:

STEEL

ROLLER 1

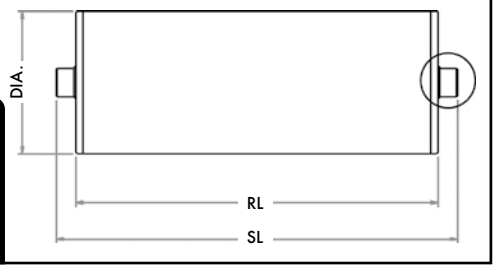

IMPACT

ROLLER 2

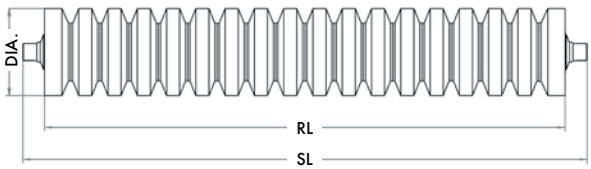

RUBBER DISC RETURN

ROLLER 3

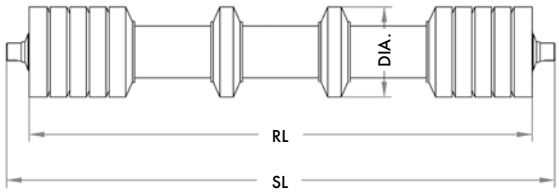

CHOOSE YOUR ROLLER	CHECK ONE
ROLLER 1 – STEEL	
ROLLER 2 – IMPACT/DISC CARRYING	
ROLLER 3 – RUBBER DISC RETURN	

CHOOSE YOUR STYLE

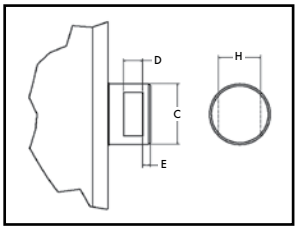

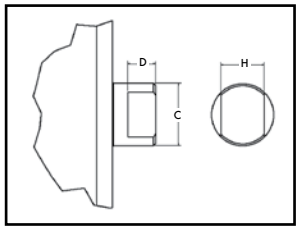

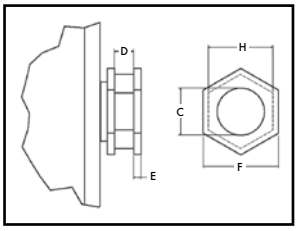

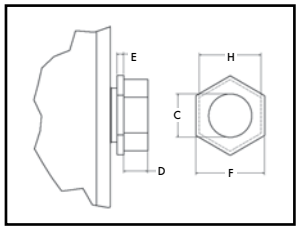

CHECK ONE

STYLE A

STYLE B

STYLE C

STYLE D

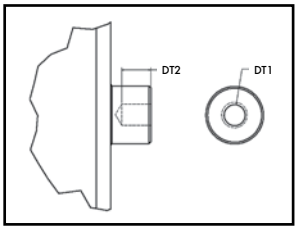

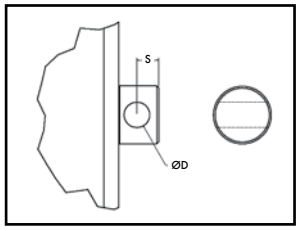

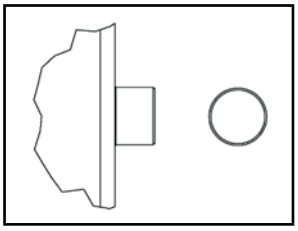

STYLE E

STYLE F

STYLE G

QUESTIONS?
Call Toll-Free: 1.888.349.5833

QUANTITY	IDLER DIA.	ROLLER LENGTH (RL)	SHAFT LENGTH (SL)	CEMA SERIES	SHAFT DIA. (C)	LENGTH OF SLOT (D)	LENGTH OF SHOULDER (E)	HEX FLAT WIDTH (F)	THICKNESS OF SLOT (H)
					When STYLE E or F is used, replace above dimensions with:	DT1	DT2	S	ØD

OR

ADAPTER NUMBER

NOTES:

CONVEYOR PRODUCT DATA SHEET

COMPANY: _____ PHONE #: _____

CONTACT: _____ EMAIL: _____

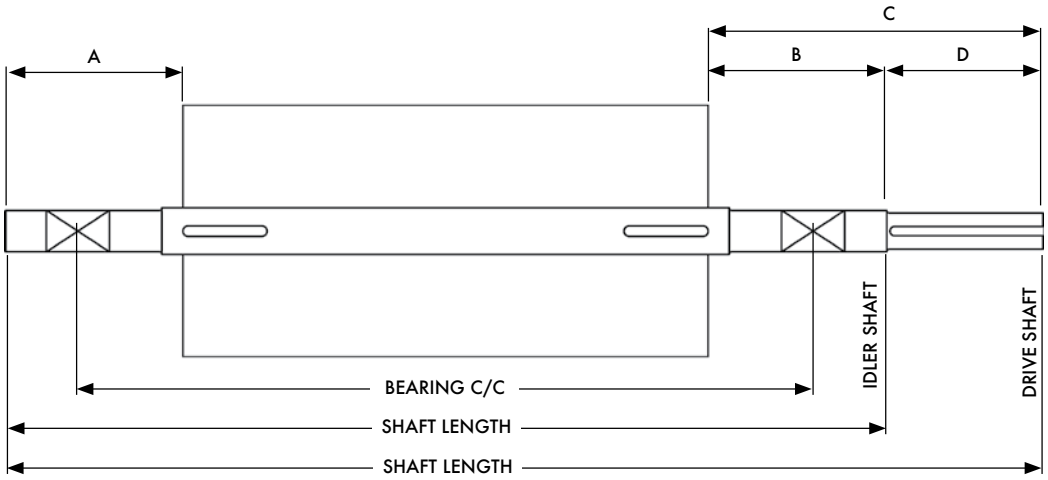

1. PULLEY POSITION/LOCATION: ◯ DRIVE ◯ NON-DRIVE ◯ SNUB ◯ TAIL ◯ OTHER _____
2. PULLEY TYPE: ◯ DRUM ◯ WING
3. PULLEY FACE TYPE: ◯ FLAT ◯ CROWN
4. PULLEY DUTY: ◯ STANDARD ◯ MINE ◯ ENGINEERED CLASS
5. BALANCED: ◯ YES ◯ NO
6. DIAMETER (in): _____
7. FACE WIDTH (in): _____
8. SHELL THICKNESS: _____
9. CENTER PLATE THICKNESS: _____
10. END PLATE THICKNESS: _____
11. HUB TYPE: ◯ XT ◯ QD ◯ KEYLESS ◯ WELDED SHAFT
12. HUB PART NUMBER: _____
13. BUSHING BORE: _____
14. LAGGING THICKNESS: ◯ 1/4″ ◯ 1/2″ ◯ 3/8″ ◯ 5/8″ ◯ 1″ ◯ OTHER _____
15. LAGGING TYPE: ◯ PLAIN ◯ DIAMOND ◯ WELD-ON ◯ CERAMIC ◯ HTV ◯ DBCL
16. BEARING C/C: _____
17. BEARING PART NUMBER: _____
18. NON-DRIVE SHAFT LENGTH: _____
19. DRIVE SHAFT LENGTH: _____
20. PULLEY OFFSET - DIM A: _____
21. RIM TO TURNDOWN - DIM B: _____
22. PULLEY OFFSET - DIM C: _____
23. DRIVE KEY LENGTH - DIM D: _____
24. SHAFT DIA. THRU PULLEY - DIM OD: _____
25. SHAFT DIA. THRU BEARING - DIM N: _____
26. SHAFT DIA. THRU DRIVE - DIM M: _____
27. SHAFT MATERIAL: ◯ C1018 ◯ 1045 ◯ 4140 ◯ OTHER _____

ENGINEERING REQUEST FORM

COMPANY: PHONE #:

CONTACT: EMAIL:

1. CAPACITY:* STPH MTPH
2. CONVEYOR LENGTH (Pulley center to center):* ft m
3. CONVEYOR INCLINE TO LIFT:* Deg ft m
4. MATERIAL BEING CONVEYED:*
5. MATERIAL LUMP SIZE:* in mm
6. ANGLE OF REPOSE:* Deg
7. BULK DENSITY:* lbs/ft³ kg/m³
8. OPERATING TEMPERATURE:* °F °C
9. BELT WIDTH:* in m
10. BELT SPEED:* fpm m/s
11. IDLER SPACING: ft m
12. IDLER ANGLE: Deg
13. MOTOR: HP kW
14. BELT SPECIFICATION:
15. NUMBER OF BELT PLOWS:
16. NUMBER OF BELT SCRAPERS:
17. LENGTH OF SKIRTING:
18. AUTOMATIC TAKE-UP MANUAL TAKE-UP
19. COUNTER WEIGHT: lbs kg

Sketch of Conveyor Configuration:

FOR FEEDER BELT APPLICATIONS:

1. HOPPER OPENING WIDTH: ft m
2. HOPPER OPENING LENGTH: ft m

FOR IMPACT BEDS:

1. DROP HEIGHT: ft m

Additional Information/Comments:

QUESTIONS?
Call Toll-Free: 1.888.349.5833

LOAD RATING REFERENCE GUIDE

LOAD RATINGS FOR CEMA B IDLERS (LBS.)

BELT WIDTH (INCHES)	TROUGH ANGLE 20°	35°	45°	RETURN
18	410	410	410	220
24	410	410	410	190
30	410	410	410	165
36	410	410	396	155

LOAD RATINGS FOR CEMA C IDLERS (LBS.)

BELT WIDTH (INCHES)	TROUGH ANGLE 20°	35°	45°	RETURN
18	900	900	900	475
24	900	900	900	325
30	900	900	900	250
36	900	837	810	200
42	850	791	765	150
48	800	744	720	125
54	750	698	675	–
60	700	650	630	–

LOAD RATINGS FOR CEMA D IDLERS (LBS.)

BELT WIDTH (INCHES)	TROUGH ANGLE 20°	35°	45°	RETURN
24	1200	1200	1200	600
30	1200	1200	1200	600
36	1200	1200	1200	600
42	1200	1200	1200	500
48	1200	1200	1200	425
54	1200	1116	1080	375
60	1150	1070	1035	280
72	1050	977	945	155

LOAD RATINGS FOR CEMA E IDLERS

BELT WIDTH (INCHES)	TROUGH ANGLE 20°	35°	45°	RETURN
36	1800	1800	1800	1000
42	1800	1800	1800	1000
48	1800	1800	1800	1000
54	1800	1800	1800	925
60	1800	1800	1800	850
72	1800	1800	1800	700
84	1800	1674	1620	550
96	1750	1628	1575	400

LOAD RATINGS FOR CEMA F IDLERS (LBS.)

BELT WIDTH (INCHES)	TROUGH ANGLE 20°	35°	45°	RETURN
60	3000	3000	3000	1500
72	3000	3000	3000	1200
84	3000	3000	3000	900
96	2800	2800	2800	600

QUESTIONS?
Call Toll-Free: 1.888.349.5833

NOTES & CALCULATIONS:

BRACKET DATA SHEET

COMPANY:

CONTACT:

PHONE #:

EMAIL:

APPROVED FOR MANUFACTURE BY:

DATE:

SIGNATURE:

BRACKET 1

BPS

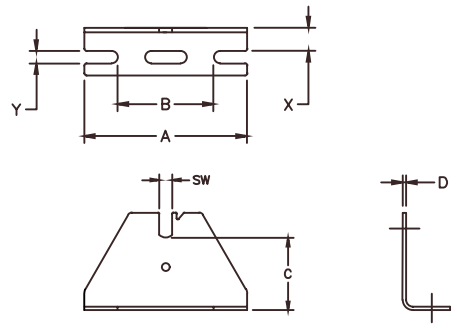

BRACKET 2

BPSR

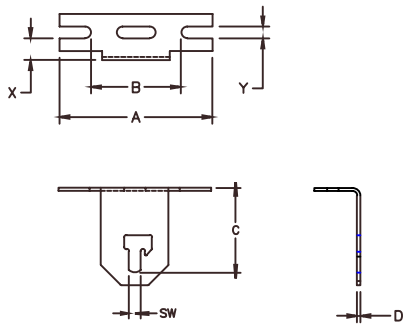

BRACKET 3

BPS

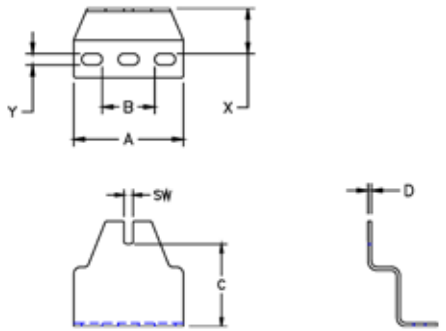

BRACKET 4

BPSR

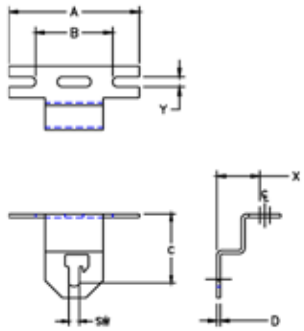

BRACKET 5

CIR

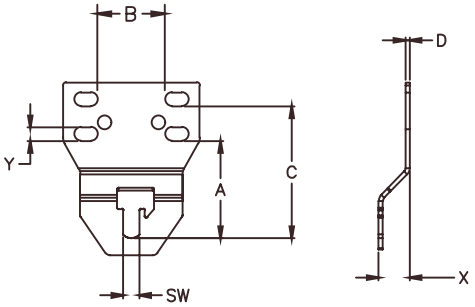

BRACKET 6

SR

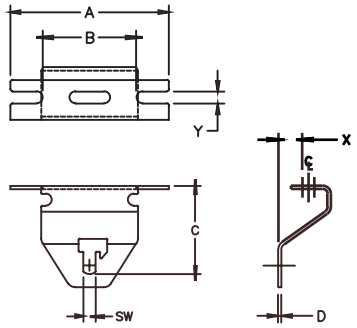

CHOOSE YOUR BRACKET	CHECK ONE
BRACKET 1 – BPS	
BRACKET 2 – BPSR	
BRACKET 3 – BPS	
BRACKET 4 – BPSR	
BRACKET 5 – CIR	
BRACKET 6 – SR	

QUANTITY	DIM A	DIM B	DIM C	DIM D	DIM X	DIM Y	DIM SW

NOTES:

TERMS & CONDITIONS

WARRANTY

Luff Industries Ltd. warrants that the products it manufactures are free from defects in material and workmanship, when used under normal operating conditions. The duration of this warranty is 24 months from the date of delivery, or 2,000 hours of operation, whichever occurs first.

If a defect is found to arise from manufacturing, the customer must notify Luff Industries Ltd. in writing, within 30 days from the date of failure before proceeding with repairs or returning the product.

Luff Industries Ltd. will correct any defect in materials or workmanship by repair or replacement of the defective product.

Luff Industries Ltd. shall not be responsible, under any circumstances, for more than the cost of repair or replacement of the defective product.

Non-compliance of the above conditions can void the warranty and Luff Industries Ltd. will not be responsible for the cost of repairing or replacing the product.

RETURNED PRODUCTS

Luff Industries Ltd. products may not be returned without prior approval. Any and all expenses incurred in the return of product shall be the responsibility of the customer. Returned product is subject to a 20 percent restocking fee.

PRICES AND PAYMENT TERMS

Prices shall remain in effect for fifteen (15) days after the date of quotation. Otherwise, prices are subject to change without notice. On approved credit, payments are due 30 days after the invoice date, unless otherwise arranged.

CANCELLATION

Orders can only be cancelled before production is started, otherwise charges for costs incurred will be applied.

CHANGES

Customers may request changes or additions to the products consistent with Luff Industries Ltd. specifications and criteria. In the event such changes or additions are accepted by Luff Industries Ltd. there may be a revision to the price and delivery schedule. Luff Industries Ltd. reserves the right to change design and specifications for product without prior notice to the customer, except with respect to custom made products.

DIMENSIONS

Dimensions listed in the catalogue are for reference only and may not be exact. Please request certified drawings for exact dimensions.

SHIPMENTS

All shipments will be shipped F.O.B. Luff Industries Ltd. freight collect, unless otherwise specified in the contract. All claims for lost or damaged product occurring in transit, after pick up by the freight carrier, must be handled by the customer directly with the carrier.

SAFETY DEVICES

Luff Industries Ltd. products are provided with only those safety devices identified on the invoice. It is the responsibility of the customer to furnish appropriate guards for machinery parts in compliance with the applicable regulations.

WEIGHT

Weights shown in this catalogue are approximate and are provided for estimating purposes only.

ACCEPTANCE

All orders are accepted upon the condition that the customer agrees to be bound by the Terms and Conditions contained herein.

CONVEYING PERFORMANCE

TF: 1.888.349.LUFF(5833) E: info@luffindustries.com W: www.luffindustries.com